CONGRESS OF THE UNITED STATES
CONGRESSIONAL BUDGET OFFICE

A

CBO

STUDY

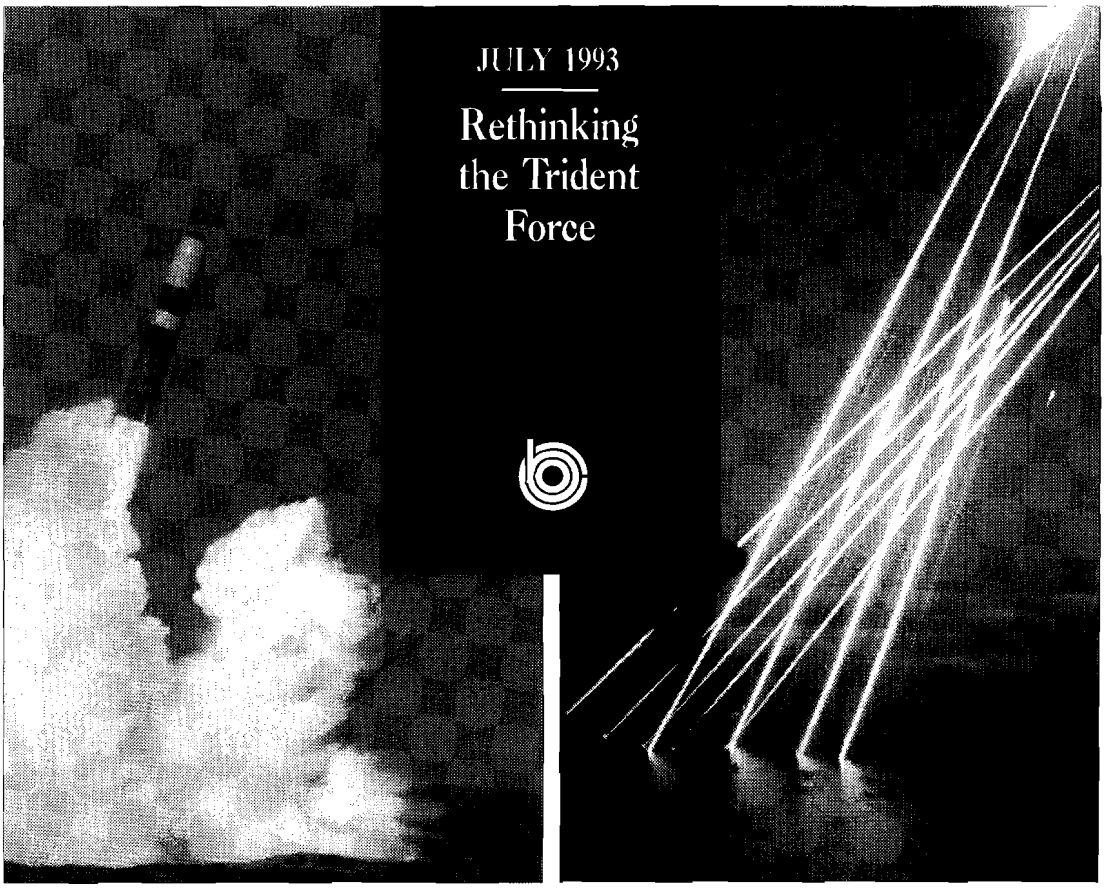

JULY 1993

Rethinking the Trident Force

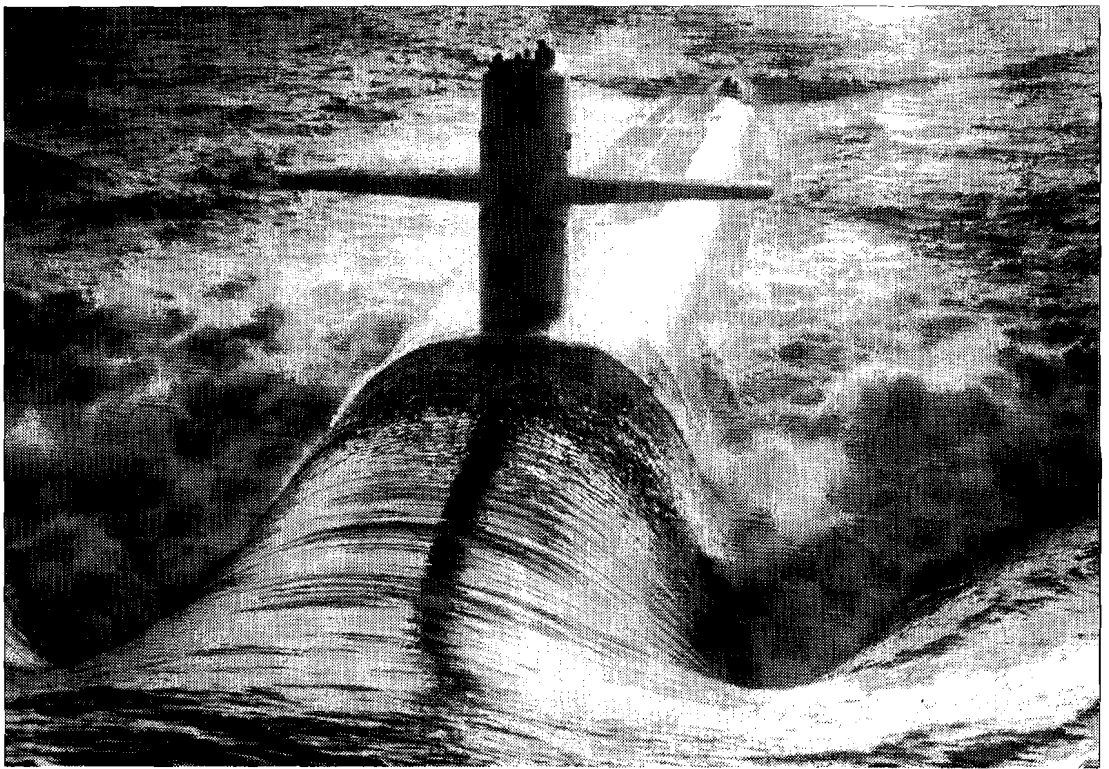

RETHINKING THE TRIDENT FORCE

The Congress of the United States
Congressional Budget Office

NOTES

Unless otherwise indicated, all years referred to in this study are fiscal years, and all costs are in 1994 dollars of budget authority.

Numbers in the text, tables, and figures of this study may not add to totals because of rounding.

Unless otherwise indicated, the number of D5 missiles required for the base-case plan and the five options considered in this paper excludes the 28 research and development missiles bought for the program.

Cover photos show (clockwise from upper left) launch of a D5 missile, D5 warheads reentering the atmosphere over a test range, and the USS Maryland Trident submarine. (U.S. Navy photos.)

Preface

What forces will the United States require to deter nuclear war in the post-Cold War period? A nuclear attack on this country is less likely than it has been for decades: the Soviet Union has collapsed; the chances of a major war occurring in Europe are significantly diminished; and Russia and the United States, motivated by two arms reduction treaties and several unilateral initiatives, are reducing the size and readiness of their nuclear arsenals. Nevertheless, some uncertainty about the future remains. Russia's democracy is fragile, and its nuclear arsenal will continue to be extensive until early in the next decade. How should the United States structure its nuclear forces to account for these factors while also responding to pressure to reduce spending for national defense?

The D5 submarine-launched ballistic missile is the only nuclear weapon that the United States will continue to buy throughout the 1990s, and as a result, its future is a key issue in the debate about restructuring U.S. nuclear forces. This study, requested by the House Committee on Armed Services, analyzes the costs and effects of several alternatives to the Navy's plans for the D5 missile and the Trident ballistic-missile submarine force in which it is deployed. In keeping with the mandate of the Congressional Budget Office (CBO) to provide objective analysis, this study makes no recommendations.

David Mosher of CBO's National Security Division prepared the report under the supervision of Robert F. Hale and R. William Thomas. Raymond Hall of CBO's Budget Analysis Division performed the cost analysis. Karen Ann Watkins provided valuable assistance during the analysis and writing. Bruce Arnold, Lane Pierrot, and Michael O'Hanlon of CBO and John R. Harvey of the Center for International Security and Arms Control at Stanford University provided thoughtful comments on an earlier draft of the study. In addition, the author would like to thank Dunbar Lockwood, Stefan Michalowski, Thomas Nicholas, and the numerous employees of the Department of Defense, the military services, and the Arms Control and Disarmament Agency who were also of great assistance. Of course, all responsibility for the study lies with the author and CBO.

Leah Mazade edited the manuscript, and Christian Spoor provided editorial assistance. Cindy Cleveland prepared numerous drafts of the study. With the assistance of Kathryn Quattrone, Martina Wojak-Piotrow prepared the report for publication.

Robert D. Reischauer
Director

July 1993

Contents

	SUMMARY	xi
ONE	INTRODUCTION	1
	Historical Role of U.S. Ballistic-Missile Submarines *2* Changing Threats as the Cold War Ends *6*	
TWO	DEFINING A BASE-CASE PLAN FOR THE SLBM FORCE	9
	A Brief Description of the SLBM Force *9* Base-Case Plan for the SLBM Force *11* How Much Will the Base-Case Plan Cost? *19*	
THREE	OPTIONS THAT CONTINUE D5 PROCUREMENT THROUGH 1999	23
	Option I: Reduce Modernization *24* Option II: Reduce Fleet Size *34* Option III: Reduce Fleet Size Moderately *39*	
FOUR	OPTIONS THAT ASSUME D5 PROCUREMENT ENDS QUICKLY	41
	Option IV: Reduce Modernization and Deactivate Tubes *41* Option V: Reduce Fleet Size, Deactivate Tubes, and Reduce Flight Tests *45*	
FIVE	CONCLUSION: CHOOSING AMONG THE OPTIONS	49
	What Deters, and How Much Is Enough? *49* Measuring Deterrence *50* Effects on Costs *52*	

APPENDIXES

A The D5 Flight-Test Program *55*

B Deploying C4 Missiles in D5-Equipped Trident Submarines *59*

C Possible Safety Improvements for Trident Missiles and Warheads *61*

D Increasing Savings by Halving Operating Tempo *67*

E Treaty Issues Raised by Detubing SSBNs *71*

TABLES

S-1.	Options for Restructuring the Trident SLBM Force	xiii
S-2.	Potential Savings from the Options for the SLBM Force, Relative to the Base-Case Plan	xiv
1.	Characteristics of U.S. Submarine-Launched Ballistic Missiles	4
2.	Authorization and Delivery Dates for the Navy's Trident Submarines	11
3.	Backfit Schedule for the Navy's C4-Equipped Trident Submarines Assumed Under the Base-Case Plan	14
4.	Acquisition Schedule for the D5 Missile Under the Base-Case Plan	18
5.	Distribution of D5 Missiles Under the Base-Case Plan	19
6.	Costs of the SLBM Force Under the Base-Case Plan	20
7.	Options for Restructuring the Trident SLBM Force	25
8.	Rating the Resistance of Targets to the Effects of Nuclear Weapons	27
9.	Capability of Current U.S. Ballistic Missiles to Destroy Hardened Targets	28
10.	Potential Savings from the Options for the SLBM Force, Relative to the Base-Case Plan	30
11.	Costs to Complete the Backfit of the C4 Trident Submarines and Extend the Life of the C4 Weapon System	32
D-1.	Potential Additional Savings from Reducing Operating Tempo	69

FIGURES

1.	Total Ballistic-Missile Submarine Inventory Under the Base-Case Plan, 1960-2020	12
2.	Status of the Trident Ballistic-Missile Submarines Under the Base-Case Plan, 1990-2030	13
3.	Cross-Sectional View of C4 and D5 Missiles in a Trident Submarine	15
4.	Effect of Canceling the Backfit on the Ability of the SLBM Force to Destroy Targets	29
C-1.	Schematic Drawing of the Position of Warheads Around the Third Stage of the D5 Missile	63

BOX

1.	The START II Treaty and the Trident Force	16

Summary

Today, the nuclear forces of the United States consist of about 10,000 deployed warheads that can be delivered by long-range bombers, land-based intercontinental ballistic missiles (ICBMs), and submarine-launched ballistic missiles (SLBMs). Those forces (also known as the nuclear triad) are designed to deter a nuclear war and, if necessary, fight one.

U.S. nuclear forces are likely to shrink throughout the 1990s as limits from recent arms control agreements take effect. By 2003, the United States will have only about 3,500 deployed strategic nuclear warheads, provided that the second Strategic Arms Reduction Talks Treaty (START II) is ratified and carried out. Some shrinkage has already taken place over the past two years, especially among land-based missiles and bombers. In addition, the Department of Defense (DoD) has terminated virtually every program to modernize the U.S. nuclear arsenal, largely in response to budget pressures and the end of the Cold War.

The SLBM modernization program is the notable exception. Indeed, although the Navy has reduced the program from its original size to reflect the new security environment, the service still plans to purchase a large new missile--designated the D5--at least through 1999.

Several factors explain why the SLBM modernization program is continuing. First, the Navy needs to purchase more missiles in order to deploy 24 of them on all of the Trident submarines that are equipped to carry the D5. Second, the SLBM force will become the backbone of the U.S. nuclear deterrent--for several reasons. Of all U.S. nuclear forces, submarines at sea are the least vulnerable to enemy attack. Moreover, DoD anticipates changes related to the START II treaty in U.S. land-based missile and bomber forces. As a result of those changes, the SLBM force in the future will provide the bulk of the nation's nuclear deterrent, except perhaps during a crisis. A third factor in the Navy's continuing the SLBM modernization is the need to refurbish or replace many of the currently deployed submarine-based missiles, which, according to the Navy, are reaching the end of their expected service life.

Yet the current plans to continue modernizing the SLBM force may change. The costs to procure and operate an 18-submarine force--the size of the fleet that DoD is likely to deploy under START I and START II--could total as much as $62.2 billion from 1994 through 2010. (Throughout this study, all costs are expressed in 1994 dollars of budget authority.) More than $10 billion of that total would be spent to procure D5 missiles--a tempting target for budget cutters.

The Navy has recently proposed changes to the D5 program: it would cut by half the flight-testing program for the D5 missile and would halve the number of missiles it plans to procure each year. But even with those reductions, the diminished threat of nuclear war with Russia, now that the Cold War is over, could lead to more far-reaching changes in the SLBM force in general and in the D5 missile program in particular.

This study presents alternative approaches to restructuring the SLBM force. For simplicity, it focuses only on that "leg" of the triad; the ICBM and bomber forces are assumed to remain at the levels planned by DoD to comply with the START II treaty. This assumption does not imply a judgment about the balance that DoD seeks between the legs of the triad and the total number of deployed warheads under the treaty. Those topics are outside the scope of this analysis.

Base-Case Plan for the SLBM Force

To date, the Clinton Administration has submitted a detailed defense budget for 1994 only; a long-range plan will not be available until later. To provide a benchmark for assessing various options for the SLBM force over the long term, the Congressional Budget Office (CBO) defined a base-case plan using recent statements by the Navy about its plans for the force through 1999. Beyond 1999, the base-case plan reflects unofficial Navy statements about its preferred course over the long term.

Under the base-case plan, the SLBM force in 1998 will consist of 18 Trident submarines, each equipped with 24 missiles (see Summary Table 1). The oldest 8 submarines will carry the older C4 missile; the other 10 will carry the larger, more accurate D5 missile. Beginning in 2001 and ending in 2010, the plan assumes that the Navy will "backfit" the C4 submarines, converting them so that they can carry D5 missiles. By 2010, then, the SLBM force will consist of 18 Trident submarines, all carrying modern D5 missiles. To ensure that the D5 remains reliable and accurate, the Navy's plans also call for a program of flight testing--consisting of six missile launches per year in addition to other types of tests.

To carry out this plan, the Navy must purchase 333 more D5 missiles beyond 1993 (for a total of 628). The base-case plan assumes that the Navy will purchase the missiles at a rate of 24 per year through 2007.

Other factors besides the number of missiles and submarines influence the structure and cost of the base-case plan. For example, the D5 missile was designed to carry at least eight nuclear warheads. To accommodate the limits on SLBM warheads in the START II treaty, the Navy intends to reduce the number of warheads on each D5 missile from eight to four. In addition, the plan assumes that the Navy will continue its present operating tempo--the number of submarines on patrol at any one time--keeping two-thirds of the Trident submarines at sea during peacetime.

Under the base-case plan, operating and modernizing the SLBM force will cost $17.4 billion from 1994 through 1999 (see Summary Table 2). Through 2010--a period chosen to capture fully the effects of the D5 program--the force will cost at least $46.6 billion, including $10.1 billion to procure D5 missiles, $2.3 billion to support the C4 weapon system until the backfit is complete, $2.6 billion to backfit the eight C4 submarines and modify the C4 facilities, $14.6 billion to operate and support the submarines, and $17.0 billion to maintain the readiness and reliability of the missiles and weapon systems. The estimate of the total cost is consistent with the assumption that Trident submarines remain in the fleet for 40 years. Under that assumption, the Navy would not have to purchase replacement submarines until after 2010.

Total costs through 2010 could rise to $62.2 billion, however, if the Navy must retire the Trident submarines after 30 years, as its plans

Summary Table 1.
Options for Restructuring the Trident SLBM Force

Option		Number of Submarines (D5/C4)	Missiles per Submarine	Warheads per Missile	Total SLBM Warheads	Backfit[a]	Total Missiles Bought[b]	D5 Procurement Ended After
Base-Case Plan[c]		18 (18/0)	24	4	1,728	Yes	628 (333)	2007
Options That Continue D5 Missile Procurement Through 1999								
I.	Reduce Modernization (Cancel Backfit)	18 (10/8)	24	4	1,728	No	428 (133)	1999
II.	Reduce Fleet Size	10 (10/0)	24	7	1,680	No	428 (133)	1999
III.	Reduce Fleet Size Moderately	14 (14/0)	24	5	1,680	Yes[d]	528 (233)	2003
Options That End D5 Missile Procurement Quickly								
IV.	Reduce Modernization and Tubes per Submarine	18 (10/8)	12	8	1,728 (1,248)[e]	No	315 (20)	1994
V.	Reduce Fleet Size, Tubes per Submarine, and Flight-Test Program	10 (10/0)	12	8	960[f] (840)[e]	No	295 (0)	1993

SOURCE: Congressional Budget Office derived from Department of Defense data.

NOTE: SLBM = submarine-launched ballistic missile.

a. The backfit is the process by which the Navy would modify its C4-equipped Trident submarines to carry D5 missiles.

b. The numbers in parentheses indicate the number of missiles that must still be purchased in 1994 and beyond. All totals exclude the 28 missiles bought for research and development.

c. Because the Clinton Administration has not released its long-term plan for the SLBM force, the Congressional Budget Office has defined a base-case plan to provide a benchmark for assessing the effects of the options.

d. Only four C4-equipped submarines would be converted to carry D5 missiles in Option III. The others would be retired at the rate of roughly one per year starting in 2001.

e. The numbers in parentheses indicate the number of warheads permitted under the second Strategic Arms Reduction Talks Treaty (START II) if deactivating missile tubes on Trident submarines (detubing) is not permitted. Option IV assumes that the C4 submarines would not be detubed in that case.

f. Under Option V, the United States could keep the total number of its deployed strategic warheads at 3,500--the level planned under the START II treaty--by increasing the number of warheads carried by bombers. If detubing is not allowed, the United States could keep only about 3,400 total deployed strategic warheads.

now assume. The extra $15.6 billion would be needed to develop and procure replacements for the Tridents that would begin to retire in 2011. Later in this decade, the Navy will re-evaluate the service life of the submarines in hopes of keeping them in the fleet longer--perhaps for up to 40 years. Because the outcome of that evaluation is uncertain, CBO has estimated the costs in this study under both assumptions.

The average annual cost of the base-case plan--which could be almost as high as $4 billion per year through 2010--is small relative to the annual defense budgets of between $230 billion and $260 billion that the Clinton Administration anticipates through 1999. At the same time, it represents more than one-third of the average annual budget for offensive nuclear forces through 2010 that the Bush Administration planned to deploy under the START II treaty. Those costs may seem high when the chances of a large-scale surprise nuclear attack on the United States have, according to Secretary of Defense Les Aspin, reached "the vanishing point."

Summary Table 2.
Potential Savings from the Options for the SLBM Force, Relative to the Base-Case Plan
(In billions of 1994 dollars of budget authority)

Option	1994	Total, 1994-1999	Total, 1994-2010: Replace Submarines After 40 Years	Total, 1994-2010: Replace Submarines After 30 Years
Cost of Base-Case Plan[a]	2.7	17.4	46.6	62.2
Savings from Options That Continue D5 Missile Procurement Through 1999				
I. Reduce Modernization (Cancel Backfit)[b]	0	1.3	0.5	0.5
II. Reduce Fleet Size	0	2.3	13.0	28.6
III. Reduce Fleet Size Moderately	0	0	4.3	11.1
Savings from Options That End D5 Missile Procurement Quickly				
IV. Reduce Modernization and Tubes per Submarine	0.5	4.9	4.3	4.3
V. Reduce Fleet Size, Tubes per Submarine, and Flight-Test Program	1.1	6.6	16.7	32.3

SOURCE: Congressional Budget Office derived from Department of Defense data.

NOTE: SLBM = submarine-launched ballistic missile.

a. Because the Clinton Administration has not released its long-term plan for the SLBM force, the Congressional Budget Office has defined a base-case plan to provide a benchmark for assessing the effects of the options. In addition to the $1.1 billion requested by the Navy to purchase 24 D5 missiles in 1994, the costs of the base-case plan include $600 million to operate the ballistic-missile submarine force and $1 billion to maintain the readiness of the C4 and D5 missiles and their associated weapon system hardware.

b. The backfit is the process by which the Navy would modify its C4-equipped Trident submarines to carry D5 missiles.

Approaches to Reducing Costs

To illustrate the range of choices facing the Congress, this study considers several approaches that restructure the SLBM force to reduce its cost:

- Reduce the planned degree of modernization by canceling the backfit and refurbishing the older C4 missiles so that they can remain in operation;
- Reduce the size of the fleet by retiring some submarines early, thereby minimizing or eliminating the need for the backfit;
- Reduce the number of missiles carried on each submarine; and
- Reduce the size of the flight-test program for the D5 missile.

The five options that CBO analyzed employ one or more of these approaches. All of the analysis assumes that the START II treaty is ratified by both the United States and Russia. If it is not ratified, the United States might have to reduce the size of its nuclear forces unilaterally below the limits in the first START treaty to achieve the savings estimated for each option. In that case, decision-makers may judge some of the effects that the options would have on the force's capability to be unacceptable.

Restructuring the SLBM Force, Assuming D5 Procurement Continues Through 1999

CBO's first three options design SLBM forces under the assumption that the Navy will continue procuring D5 missiles at least through 1999. The changes that would occur under these options would be relatively moderate compared with those occurring under the options that stop procurement immediately.

Options Defined

Option I would reduce the degree of modernization in the SLBM force by canceling plans to backfit with D5 missiles the eight submarines that currently carry C4 missiles. Instead, the service life of the C4 weapon system (currently estimated to be around 20 years) would be extended by refurbishing the missile and its associated equipment so that the system can remain in operation for at least eight additional years. Using that approach would require purchasing 133 additional D5 missiles (for a total of 428) and would end procurement of the D5 after 1999 (see Summary Table 1 on page xiii). Canceling the backfit is perhaps the most frequently mentioned option for reducing the cost of the SLBM force and one that the Navy itself is seriously considering.

Rather than reducing the planned level of modernization, Option II would reduce the size of the fleet by retiring the eight C4 submarines early (beginning in 2001). The early retirements would eliminate the need either to backfit the submarines or to extend the service life of the C4 weapon system. This option would produce a smaller SLBM force (10 submarines by 2010 rather than 18), but the force would be fully equipped with modern D5 missiles. Like the previous option, Option II would require purchasing 133 additional D5 missiles (for a total of 428) and would end procurement after 1999. To keep the number of deployed SLBM warheads at the ceiling permitted under the START II treaty, Option II would increase to seven the number of warheads per missile (the base-case level is four).

Option III, which is a more moderate approach than Option II, would reduce the size of the fleet to 14 submarines by 2005 by retiring the four oldest C4-equipped Tridents early. The four remaining submarines that now carry the C4 missile would be backfitted so that all 14 Trident submarines retained in the fleet

would eventually carry the D5 missile. This option would procure a total of 528 missiles through 2003 (of which 233 would have to be purchased after 1993).

Budgetary Savings Estimated

To reflect fully the effects of altering the D5 program and the size of the ballistic-missile submarine fleet, CBO's analysis assessed costs from 1994 through 2010 under two assumptions about the service life of the Trident submarine: one of 40 years and the other of 30. Over that lengthy period, the savings associated with the first three options--relative to the base-case plan--vary widely. If one assumes a service life of 40 years for the Trident, reducing the size of the fleet to 10 ships (Option II) saves the most, a total of at least $13.0 billion, or 28 percent of the cost of the base-case plan during the 1994-2010 period (see Summary Table 2 on page xiv). Option III, by reducing the fleet's size more moderately, saves at least $4.3 billion (or 9 percent) during the same period. Those figures capture all of the savings from implementing the options except the savings from buying fewer replacement submarines. Those savings are not included because replacements would not have to be purchased under the base-case plan or any of the options until after 2010 if the Navy is able to keep the Tridents in service for 40 years.

If, however, the Navy retires the submarines after 30 years of service, the savings from Options II and III will be considerably larger. To keep the size of the fleet constant at 18 submarines, the Navy would have to spend an additional $15.6 billion through 2010 to develop and procure replacements under the base-case plan. Option II avoids those costs altogether because, to sustain a force of 10 submarines, replacements would not have to be bought until after 2010. Consequently, the savings from Option II would be $28.6 billion in this scenario, or 46 percent of the cost of the base-case plan. In a similar fashion, Option III avoids about half of those replacement costs because it requires that only four submarines be purchased by 2010 to sustain a force of 14 ships. Thus, the savings from Option III would be $11.1 billion, or 18 percent of the cost of the base-case plan.

Perhaps the most talked-about approach to cutting SLBM costs--reducing the planned level of modernization by canceling the backfit (Option I)--would save almost nothing through 2010, according to the Navy's estimates. The reason is that savings associated with buying fewer D5 missiles are almost fully offset by the substantial costs of extending the service life of the C4 weapon system--an effort that involves replacing the rocket motors in the missiles, extending the life of the system hardware, maintaining the missile inventory, and conducting flight tests. If the rocket motors on the C4 missiles do not have to be replaced--a question that is currently being debated--canceling the backfit could save as much as $4.5 billion from 1994 through 2010.

During the 1994-2010 period, assumptions about the service life of the Trident submarine do not affect savings under Option I because both Option I and the base-case plan maintain a fleet of 18 ships. But extending the service life of the Tridents to 40 years would require that the C4 missiles remain in the fleet longer. In that case, avoiding the cost of remotoring the missiles would be difficult.

Near-term savings (from 1994 through 1999) are quite modest under all three of these options. (Savings in the near term are unaffected by assumptions about retiring ships.) Savings range from zero for Option III to $2.3 billion for Option II. In no instance are savings realized before 1996. Moreover, much of the $1.3 billion near-term savings that Option I achieves is temporary because all but $500 million will be offset by higher costs in subsequent years. Thus, canceling the backfit primarily shifts costs to the future.

Effects on Capability Assessed

In concert with land-based missiles and bombers, the goal of the SLBM force is to deter nu-

clear war. Until recently, deterrence was measured in traditional Cold War terms: for example, the number of deployed warheads, the number of submarines and warheads deployed at sea, the range of ballistic missiles, the ability to attack key types of targets, and the ability to respond to unexpected changes in threats. Those measures may become less important in the future, particularly if the Cold War emphasis on destroying an opponent's nuclear forces and leadership gives way to a more basic deterrent--the threat of societal destruction. Nevertheless, all of them will continue to be of some concern during the current transition period.

None of the first three options would measurably affect the number of warheads deployed in the SLBM force or the number deployed at sea. By adjusting the number of warheads per missile, all three of the options would permit the United States to remain very near the limit of 1,750 SLBM warheads specified in the START II treaty (see Summary Table 1 on page xiii). By maintaining two-thirds of the force at sea, all three options would also retain the same number of survivable warheads as envisioned in the base-case plan.

By other measures, the options would reduce U.S. nuclear capability in various ways, but those reductions may be acceptable in an era of diminished threats to U.S. security. Compared with the base-case plan, cutting back on modernization plans by canceling the backfit (Option I) would constrain the ability of SLBM forces to destroy certain types of targets--such as command centers and older Russian missile silos--that have been moderately "hardened" to resist the effects of nuclear weapons. Nevertheless, the U.S. SLBM force would retain a substantial hard-target capability, exceeding today's levels, that would enable it to destroy those targets. Nor would Option I reduce the ability of the U.S. SLBM force to destroy very hard targets--such as modern missile silos and some buried leadership bunkers--because the number of powerful W-88 warheads deployed under all of the options would remain constant.

Options II and III assume that D5 missiles would carry more than four warheads (the base-case level). By increasing the weight that a missile must carry, the added warheads would reduce its range. In addition, by placing more warheads on each missile and deploying fewer missiles, the force would be less able to attack enemy targets that are widely dispersed. Yet despite the extra weight, the range of the missiles (and consequently the areas of the sea where the submarines could patrol) would remain above Cold War levels, when each missile was expected to carry a large number of warheads. Furthermore, the ability to attack widely dispersed targets (sometimes called targeting flexibility), although useful from the perspective of a war planner, may not appreciably change the effectiveness of the U.S. nuclear deterrent.

Reducing the size of the fleet (Options II and III) might make U.S. submarines more vulnerable to enemy detection and destruction before launching their missiles. But the perceived threat to ballistic-missile submarines was not considered great during the Cold War, and it has diminished even further now that Russia keeps many of its attack submarines in port. Moreover, Russia might find it difficult to restart an aggressive antisubmarine operation quickly, even if it again turns militaristic. Nor does any other potential adversary have antisubmarine forces capable of threatening the U.S. ballistic-missile submarine fleet.

Perhaps the most important effect of reducing the size of the fleet is that it may diminish the ability of the SLBM force to respond to changes in the nuclear forces threatening the United States. For example, consider the U.S. position if a remilitarized Russia "broke out" of the START II treaty. The United States--having reduced the number of its submarines and increased the number of warheads per SLBM--would not be able to increase the total number of warheads carried by its SLBM force to the same degree that it could under the base-case plan. It could respond, however, by adding warheads to its bombers and land-based ballistic missiles--although those war-

heads would be more vulnerable to attack (and destruction) than those deployed at sea.

Options II and III provide some insurance against near-term changes in the nuclear threat because they would not begin to reduce the number of submarines until early in the next decade. By that time, the nuclear superpowers should be further along in their transition to a post-Cold War world, and relations between them should be more predictable.

Restructuring the SLBM Force, Assuming D5 Procurement Ends Quickly

The fourth and fifth options analyzed in this study would halt D5 procurement no later than 1994. Carrying out either option would result in substantial near-term savings, but both would require far-reaching changes in the SLBM force that include reducing by half the number of missiles deployed on each submarine.

If those changes are judged to be too severe, then another approach--reducing the number of submarines deployed at sea--could be used to achieve near-term savings. A further consideration for these two options is the effect on the United Kingdom's nuclear forces of terminating D5 production early. The United Kingdom expects to buy D5 missiles through 1997 for its own Trident submarines.

Options Defined

Option IV would reduce the level of modernization planned for the SLBM force by canceling the backfit program and extending the service life of the C4 missiles. To reduce further the number of D5 missiles that the Navy requires, this option would deactivate 12 of the 24 missile tubes on each Trident submarine by filling them with enough concrete to make the missile tubes unusable but still preserve the submarines' buoyancy--a process sometimes called detubing. Option IV would require purchasing a total of 315 D5 missiles (see Summary Table 1 on page xiii). Because the Navy has already bought 295 missiles, only 20 missiles remain to be purchased in 1994, after which procurement could be ended. To maintain the number of U.S. SLBM warheads at the START II limit, each D5 missile would carry eight warheads.

Like Option IV, Option V would deactivate half the tubes on each submarine, but in addition it would reduce the size of the fleet to 10 submarines by retiring the older C4 submarines earlier than anticipated under the base-case plan. To reduce the requirements for D5 missiles even further, this option would cut back the program of follow-on flight testing from six tests per year under the base-case plan to five per year. Those changes would allow the Navy to terminate the D5 program at the end of 1993 after purchasing 295 missiles. Under this option, no missiles would be purchased in 1994 or beyond.

Detubing and Arms Control Treaties

Detubing, a key element of Options IV and V, raises several important issues related to treaty compliance and verification. Neither the first nor the second START treaty recognizes detubing as a means of meeting the numerical limits established for SLBM warheads. Consequently, for the purpose of complying with the START II treaty, a detubed submarine would be considered to carry its full complement of 24 missiles--not the 12 that it actually would carry. Without an agreement with Russia to recognize detubing as legitimate, the SLBM force envisioned under Options IV and V would have fewer warheads than are permitted by START II.

The United States and Russia must also be able to verify compliance, although verifica-

tion does not appear to present a significant problem. Compliance with a detubing agreement could be verified by means similar to those used to verify "downloading"--and with at least as much confidence. Downloading, which reduces the number of warheads on each missile, is recognized in the treaty as a legitimate way to meet the ceilings on numbers of warheads.

Effects on Cost and Capability

Interestingly, terminating the D5 program quickly does not guarantee large savings in the long run. But it would achieve them sooner than options that continue production through 1999. Option IV saves $4.9. billion in the 1994-1999 period, relative to the cost of the base-case plan (see Summary Table 2 on page xiv). After 1999, however, the Navy will incur the substantial costs of extending the service life of the C4 missiles, which would make total savings through 2010 only $4.3 billion under the fourth option. Because the size of the fleet is the same in the base-case plan and in Option IV, savings are not affected by assumptions regarding the longevity of the Trident submarine.

Long-run savings under Option IV are smaller than such savings under some of the preceding options that would continue D5 production through 1999 or beyond. Option IV might, however, save an additional $4 billion after 1999 if the Navy finds that it does not need to replace the C4 rocket motors.

In addition to its relatively modest savings, Option IV would affect the capability of the SLBM force in the form of losses of range, targeting flexibility, and the ability to respond to increased threats. For the most part, though, those effects would not be much more severe than they would be for the second option. Moreover, if negotiations to allow detubing are successful, this option would deploy 1,728 SLBM warheads on 18 submarines, a force equal in size to that envisioned in the base-case plan under the START II treaty.

Option IV, however, raises important concerns about timing. If the United States and Russia cannot reach an agreement over the next 18 months to allow detubing, this option would terminate D5 procurement before detubing was accepted as a permissible method for meeting the limits of the START II treaty. If subsequent negotiations failed, the United States--having terminated the D5 program--would be unable to deploy about 500 of the 1,750 SLBM warheads that would be permitted by the START II treaty.

This reduction might not be a serious problem: it would bring the United States' strategic nuclear arsenal closer to parity with the expected Russian arsenal under START II (roughly 3,000 warheads). Furthermore, if the reduction was not acceptable, the United States could offset the cut by increasing the number of warheads carried on bombers, though the survivability of those warheads would be less assured. Or the United States could begin producing D5 missiles again; however, restarting production would increase costs.

In contrast to Option IV, Option V saves substantial sums in both the near term and the long run. This option would retire eight submarines, halve the number of missile tubes in each submarine, and trim the flight-test program. Indeed, it is also the only option analyzed in this study that would achieve significant savings in 1994 ($1.1 billion). Relative to the base-case plan, savings could total $6.6 billion from 1994 through 1999 and $16.7 billion from 1994 through 2010, assuming that the Navy can keep its Trident submarines in the fleet for 40 years. Long-run savings would be $15.6 billion larger (for a total of $32.3 billion), relative to the base-case plan, if the Navy must replace the submarines after 30 years of service.

Option V would have some adverse effects on the range of the D5 missiles and their targeting flexibility and on the force's ability to respond to unexpected increases in the nuclear threat. In addition, the reduced flight testing that the option includes would modestly

increase the time required to recognize age-related problems that could affect the D5's reliability. Option V would also create more acute concerns about timing than Option IV because it would leave the United States less time to work out an agreement on detubing with Russia before it terminates D5 procurement.

The key effect of Option V, however, involves deployed warheads. Even if Russia agrees to recognize detubing, this option could deploy, at most, 960 SLBM warheads, a level 45 percent below the ceiling in the START II treaty. Without a detubing agreement, that number would decline further to 840 warheads. The United States could compensate for that reduction, at least partially, by increasing the number of warheads it deploys in the nuclear bomber force. Nevertheless, Option V would reduce the number of warheads in the most survivable leg of the nuclear triad below the levels allowed by the treaty.

Option V illustrates the far-reaching changes in the SLBM force that would be required to maximize the savings possible from terminating procurement of the D5 missile immediately. Those changes would substantially affect the capability of the SLBM force but may be judged acceptable in this post-Cold War period.

Chapter One

Introduction

Today, the United States maintains a "triad" of strategic nuclear forces--consisting of long-range bombers, land-based intercontinental ballistic missiles (ICBMs), and submarine-launched ballistic missiles (SLBMs). Those forces are capable of carrying the roughly 10,000 nuclear warheads that are deployed in the U.S. arsenal. They are designed to deter a nuclear war and, if necessary, fight one.

As the 1990s proceed, however, the nuclear forces of the United States are likely to shrink as limits from recent arms control agreements take effect. Some shrinkage has already occurred over the past two years as the result of unilateral actions. The Bush Administration--in response to both the disintegration of the Soviet Union and Congressional pressure--reduced the readiness of the land-based force of ICBMs by removing older missiles from their ready-to-launch, or so-called alert, status. In addition, it scaled back its modernization program, canceling the only new missile under development. The administration also reduced the size of the strategic bomber force and its planned program of modernization, retiring older aircraft, discontinuing production of the B-2 bomber and the advanced cruise missile, and canceling the new nuclear short-range attack missile.

So far, the SLBM force has avoided the outright cancellations that have affected the ICBM and bomber legs of the triad. Still, some changes have been made in the program. In September 1991, then President George Bush announced that the United States would reduce the alert status of its aging Poseidon submarines and retire them several years ahead of schedule. More significantly, in 1991 the Bush Administration stopped buying new Trident submarines after purchasing 18, rather than the 20 or more ships it had previously anticipated buying. In addition, the Navy recently decided to reduce sharply the size of the flight-test program for its new D5 ballistic missile--which the Trident submarines are designed to carry--and the rate at which the missiles will be bought.[1] But unlike the bomber and ICBM forces, whose modernization programs have been terminated, the Navy apparently still expects to purchase D5 missiles through 1999 and perhaps beyond.

Several factors explain why the SLBM modernization program is continuing. First, the Navy needs to buy more missiles to be able to deploy a full complement of 24 missiles on all 10 of the Trident submarines that will be built to carry the D5 and to support its planned program of flight testing. (Five ships have been delivered.) Second, for a number of reasons, the SLBM force will become the backbone of the U.S. nuclear deterrent. Of all U.S. nuclear forces, submarines deployed at sea are the least vulnerable to enemy attack. In addition, the SLBM force will be providing the bulk of the nation's nuclear deterrent during peacetime because of the recent reduction in the alert status of the bomber force and the cutbacks that the Department of Defense plans in the size of the U.S. bomber and land-based missile forces to comply with the second Strategic Arms Reduction Talks Treaty (START

1. The missile is also known as the Trident II missile. To avoid confusion with the submarine, this study uses the D5 designator.

II). Third, the C4 missiles now deployed on most U.S. ballistic-missile submarines are aging. If the D5 program is curtailed and the C4s remain in service, they may have to undergo a costly program to extend their service lives.

Yet despite the changes that the Navy recently made to reduce the cost of the D5 program, budgetary pressures and the shifting international environment may force the United States to reconsider its plans to continue modernizing the SLBM force. Under the base-case plan defined in this study (which uses what is understood to be the Navy's preferred approach), the total cost to operate and modernize the SLBM force could amount to $17.4 billion from 1994 through 1999 and as much as $62.2 billion through the year 2010. About $10.1 billion of this total would be spent to procure D5 missiles. Given the costs of the base-case plan, the SLBM force in general and the D5 missile program in particular may loom large as targets for budget cutters.

Strategic considerations also play a role in the increased scrutiny that the SLBM force is receiving. The costs of the base-case plan--as much as about $4 billion a year, on average, through 2010--represent only a small fraction of the $230 billion to $260 billion that the Clinton Administration expects to spend annually on national defense through 1998. But as the chance of nuclear or conventional war between the superpowers becomes increasingly remote in the aftermath of the Cold War, the United States may have less need for the enhanced capabilities that the new D5 missile would offer. The money that could be saved by cutting the program could fund conventional forces or weapon systems that would be more useful in the regional conflicts that many analysts argue will characterize the post-Cold War world. In addition, the limits on submarine-based warheads set forth in the START II treaty may prompt a reexamination of the size of the SLBM force.

This study describes the current modernization program and presents several ways to reconfigure the SLBM force. All would save money (as much as $32 billion through 2010, depending on the option), and all would affect the D5 missile program. These alternatives are best considered from the vantage point of the historical role of submarines in the nuclear triad and recent changes in potential threats to U.S. security.

Historical Role of U.S. Ballistic-Missile Submarines

The concept of carrying ballistic missiles on submarines grew out of a competition between the Navy and the Air Force in the mid-1950s in which the Navy wanted to establish itself as part of the nation's long-range (or strategic) nuclear deterrent.[2] Until the late 1950s, U.S. strategic nuclear forces consisted exclusively of bombs carried on long-range bombers.[3] As the United States began to develop guided ballistic missiles, however, the Navy started a program to develop them for deployment on submarines. (A ballistic missile is similar in principle to a baseball. It is lofted into the air by rockets--the equivalent of a throwing arm--and during the rest of its flight, it is in freefall, under the influence only of gravity and air resistance.) The Navy's development effort came to be called the Fleet Ballistic Missile (FBM) program; it was prompted by a recommendation in 1955 from a committee established to study the best approach for developing ballistic-missile forces.

2. For an excellent discussion of the political history of the SLBM program, see Graham Spinardi, "Why the U.S. Navy Went for Hard-Target Counterforce in Trident II (And Why It Didn't Get There Sooner)," *International Security*, vol. 15, no. 2 (Fall 1990), pp. 147-190. The context in which the early SLBM program began is described by David Alan Rosenberg, "The Origins of Overkill: Nuclear Weapons and American Strategy, 1945-1960," *International Security*, vol. 7, no. 4 (Spring 1983), pp. 3-71.

3. By the late 1950s, the U.S. arsenal also included thousands of tactical (short-range) nuclear forces deployed worldwide.

The First SLBMs

The Navy's first ballistic missile was the Polaris A1. Its development moved swiftly: the Congress first funded the Polaris project in 1956, and by November 1960 the Navy had deployed the first missiles. The first submarine to carry SLBMs was the George Washington, which the Navy designated a ballistic-missile submarine, or SSBN. The George Washington was originally designed as an attack submarine, but the Navy modified it to carry 16 Polaris A1 missiles, beginning the submarine-based leg of what was soon to be called the nuclear triad.

Early ballistic missiles were quite inaccurate. As the United States improved its technology, however, the accuracy and range of the missiles improved. The Air Force deployed its first missile with intercontinental range, the Atlas, in 1960; it was expected to come within an average of about one mile of its target.[4] The next generation of ICBMs had longer ranges and were far more accurate. For example, the Titan II, which was deployed in 1963, had a range of more than 6,000 nautical miles and an average inaccuracy--or circular error probable (CEP)--of 900 meters (see the discussion on page 10).

The Navy's missiles also improved during this period. The first SLBM, the Polaris A1, had a range of 1,200 nautical miles and a CEP of 1,800 meters (see Table 1). The third-generation Polaris, the A3, was deployed only four years later, and by that time the missile's range had increased to 2,500 nautical miles and its CEP had been reduced to 900 meters.

These improvements were less dramatic, particularly in terms of range, than those of the Air Force because the Navy faced two important constraints. First, its missiles had to fit within the hulls of submarines, which limited their size. That, in turn, limited their range and the size and number of warheads they could carry. Second, the submarines remained submerged for weeks, moving about to avoid detection, which limited the accuracy of the SLBMs. (The submarines could not always know their position underwater as accurately as the Air Force could know the positions of the missiles it deployed in fixed, land-based silos.)

Accuracy, however, was not a driving concern for the Navy. To avoid competing directly with the Air Force, it carefully differentiated the doctrine underlying its nascent ballistic-missile submarine force. The Navy's FBM program was built around the principle of "finite deterrence," in which its submarines could threaten retaliation (following an enemy's attack) with a small but invulnerable force directed against urban or industrial targets. That doctrine differed from the one espoused by the Air Force, which called for limiting the damage that the Soviet Union could inflict on the United States and its allies by destroying Soviet forces before they could attack. According to the theory, a successful attack of that kind would make it possible to prevail in a nuclear conflict.

Even before the advent of long-range ballistic missiles, the Navy had been openly critical of the Air Force's doctrine. Its "damage-limitation" mission imposed severe demands on U.S. nuclear forces, driving the requirements for warheads, missiles, and bombers to levels that the Navy felt were excessive. Finite deterrence fit well with the Navy's philosophy and with the strength (survivability) and weakness (accuracy) of its SLBM force. The doctrine led the Navy to emphasize the range of its missiles rather than their accuracy because longer ranges opened up larger areas of the ocean in which the submarines could operate within striking distance of their targets. That capability, in turn, enhanced their survivability by enlarging the area that Soviet antisubmarine forces would have to search. Finite deterrence also encouraged the service to stress the ability of its warheads to penetrate defenses and damage urban and industrial targets.

4. The accuracies of missiles are classified. Consequently, those reported in this study are based on unclassified sources.

Table 1.
Characteristics of U.S. Submarine-Launched Ballistic Missiles

	Polaris A1	Polaris A2	Polaris A3	Poseidon C3	Trident C4	Trident D5
			Physical Characteristics			
Length (Feet)	28.5	31.0	32.3	34.0	34.0	44.6
Diameter (Inches)	54	54	54	74	74	83
Weight (Pounds)	28,800	32,500	35,700	64,400	73,000	130,000
Number of Motors	2	2	2	2	3	3
			Capabilities			
Range (Nautical miles)	1,200	1,500	2,500	2,500	4,000+	4,000+
Number of Warheads	1	1	3	10	8[a]	8[a]
Yield (Kilotons)[b]	600	800	200	40	100	475/100[c]
CEP (Meters)[d]	1,800	900	900	450	300	150
			Program Status			
Number of Missiles Produced Through 1992	163	346	644	619	570	274
Year Deployed	1960	1962	1964	1971	1979	1989
Current Status	Retired in 1965	Retired in 1974	Retired in 1982[e]	Deployed	Deployed	Deployed

SOURCE: Congressional Budget Office based on data from the U.S. Navy and International Institute for Strategic Studies, *The Military Balance 1992-1993* (London: Brassey's, 1992).

a. To comply with the limits of the second Strategic Arms Reduction Talks Treaty (START II), the Navy indicated that it would reduce the number of warheads on D5 and C4 missiles from 8 to 4 by 2003. Under the limits of the START I treaty, the D5 can carry no more than 8 warheads, although it is capable of carrying up to 12 W-76 warheads.

b. The yield of a nuclear weapon is its explosive power, measured relative to 1,000 pounds of the explosive TNT (trinitrotoluene).

c. The D5 missile can carry either the 475-kiloton W-88 warhead or the 100-kiloton W-76.

d. The circular error probable, or CEP, is a measure of the accuracy of a missile, defined as the radius of a circle within which 50 percent of the warheads would land if they were aimed at the same target. The table shows reported values; the actual values are classified.

e. The United Kingdom still deploys the A3 missile on its four Resolution-class submarines.

In 1971, the Navy began deploying the Poseidon C3 missile on its ballistic-missile submarines. The C3 eliminated half of the inaccuracy of its predecessor. By some accounts, however, the Navy deliberately decided to forgo improvements in accuracy in favor of improvements in the number of warheads that a missile could carry to increase the ability of the force to overwhelm defenses and cause extensive damage to sprawling urban areas.[5]

The C4 missile, which was first deployed in 1979, had a longer range than the C3 and carried more powerful warheads. It also included a stellar navigation system that made it more accurate at 4,000 nautical miles than the C3 was at 2,500 (see Table 1). But despite its improved accuracy and larger warheads, the C4 missile was not capable of destroying most types of "hardened" targets--ones that had been reinforced to withstand to some degree the effects of nuclear weapons--with a high

5. Spinardi, "Why the U.S. Navy Went for Hard-Target Counterforce," pp. 157-168.

level of confidence. Consequently, the C4 was still primarily a finite deterrence weapon. Some historians argue that, in the C4 as in the C3, the Navy had again traded some accuracy to improve the ability of the SLBM force to carry out its mission of finite deterrence.

The Drive to Develop Hard-Target Capability

As detente waned during the late 1970s, the U.S. military became concerned about the vulnerability to attack that it perceived in this country's land-based missile silos. A particular concern was the increasingly accurate Soviet land-based missiles, especially the large SS-18. The military also worried about Soviet efforts to harden their SS-18 silos even further against nuclear attacks.

In response to those concerns, the strategic doctrine of the time began to place more emphasis on attacking hardened--or so-called counterforce--targets because they represented the core of the enemy's nuclear force. The new doctrine asserted that, to deter the Soviets from launching a nuclear war, U.S. forces that survived a Soviet first-strike attack must not only threaten Soviet nuclear weapons, command posts, and other facilities important for conducting nuclear and conventional wars, but also be able to continue to threaten them throughout a prolonged nuclear war that consisted of a series of exchanges. Such a doctrine required forces that could both survive an initial attack and destroy very hard targets.

To obtain the weapons necessary to implement this doctrine, the United States began to modernize its nuclear forces. It started new programs to develop systems of command, control, and communications that could function long enough to fight a protracted nuclear war. It planned to enhance the survivability of the new MX land-based missile, which would enter the force in the early 1980s, by not deploying it in fixed silos.

Military planners were also looking for SLBMs that could destroy hardened targets as effectively as the MX. That increased pressure led the Navy to move away from its doctrine of finite deterrence and to develop an SLBM that was accurate enough and large enough to attack counterforce targets. The result was the D5 missile and weapon system, which would be deployed on the Trident submarine. Development of the missile began around 1980.

The heightened emphasis on counterforce targets faced vigorous criticism from those who argued that it was the threat of societal destruction by survivable submarines that provided deterrence, not the ability to destroy some (but certainly not all) of the Soviet nuclear forces. Nevertheless, the continuing Soviet military buildup, the deterioration of U.S.-Soviet relations, and, finally, the election of a conservative U.S. President meant that this new doctrine prevailed throughout most of the 1980s.

The Trident Submarine and the D5 Missile

Deploying D5 missiles on Trident submarines overcame the SLBM force's initial limitations: it improved accuracy dramatically and also increased payload--the ability of the missile to carry heavier warheads over longer ranges. Because accuracy is essential for destroying hardened targets, that improvement--more than the yield of the D5's warheads--placed the SLBM for the first time on an equal footing with the most modern land-based missiles. (For example, reducing a missile's inaccuracy by 50 percent would improve the probability that it would destroy a hardened target by three times as much as a 50 percent increase in explosive yield.) At the same time, the Trident system, which is even quieter than its predecessors, continued the tradition of submarine stealthiness.

The first Trident submarine equipped with D5 missiles was delivered in late 1989. The eight Trident submarines deployed before 1989 were equipped with the older C4 missile. Until early 1993, the Navy had planned, during the first decade of the next century, to convert those vessels to carry D5 missiles--a process known as backfitting. Now, the Navy intends to wait until 1996 to decide whether to convert the submarines, but it still would prefer that course to its most likely alternative--canceling the backfit and extending the service life of the C4 missile.

Changing Threats as the Cold War Ends

The end of the Cold War has significantly altered military planning for nuclear war. It has reduced the need to keep large forces on a continuous-alert status and has allowed forces to be reduced. Although large arsenals remain in the United States and Russia, the tense standoff in Europe between the North Atlantic Treaty Organization (NATO) and the Warsaw Pact--a situation that many believe was the most probable cause of a nuclear war--has been relaxed. The Warsaw Pact has dissolved, the Russian Army has substantially reduced its forces in Eastern Europe, and the United States has sharply reduced its conventional forces in Western Europe and has eliminated its nuclear forces there as well. In addition, both sides continue to decrease the number of long-range missiles in their arsenals in response to unilateral reductions and the latest arms control treaties, START I and START II.

Taken together, those actions have reduced and will continue to reduce the number of counterforce targets that will be available for U.S. military planners to designate for attack. Indeed, the United States recently decreased the number of targets in its war plans and may be contemplating further reductions.

U.S. nuclear doctrine may also have begun to change, although some of that shift could be caused by budgetary pressures in addition to the diminished nuclear threat. At the very least, the military's persistent pursuit of the wherewithal to attack counterforce ,targets has slackened. For example, by 1992 President Bush had responded to changes in the Soviet Union and tight budgets by terminating plans to deploy MX missiles on railcars, which would have enhanced their survivability. He also terminated the Trident submarine program after the Navy had purchased only 18 ships and ended the production of W-88 warheads after only 400 had been built. (The warheads, which are capable of destroying Russian missile silos, were to be deployed on D5 missiles.) Although the decisions to cancel the rail-MX and the production of W-88 warheads had environmental and cost components to them, it is doubtful that the Bush Administration would have made them during the Cold War. Such concerns would probably have been overridden by worries about national security.

In unilateral actions in late 1991 and early 1992, President Bush also reduced the high level of peacetime alert maintained by U.S. strategic bombers and grounded many of the command and control aircraft that had been kept continuously airborne. By 1992, the Bush Administration had canceled production of most new counterforce systems including B-2 bombers, short-range attack missiles, and advanced cruise missiles. Most recently, to bring the United States into compliance with the START II treaty, the Bush Administration indicated that it would retire the silo-based MX and decrease by half the number of warheads deployed in the SLBM force. Finally, in early 1993, the Navy cut in half its flight testing for the D5 missile, in part to reduce costs but also because of the better-than-expected reliability of the missile.

Yet despite all of these changes, the Navy plans to continue purchasing the D5 missile in order to modernize the Trident submarine fleet. This study discusses options for altering

the D5 missile program and restructuring the SLBM force to reflect the budgetary realities and diminished threats of the post-Cold War period. For comparative purposes, those options are set against a base-case plan for the SLBM force that the Congressional Budget Office developed from the Clinton Administration's budget for 1994, the Navy's plans through 1999, and informal information from the Navy about its long-term plans. The base-case plan substitutes for a long-range plan from the new Administration, which will not be available until late in 1993 or early in 1994.

Chapter Two

Defining a Base-Case Plan for the SLBM Force

To date, the Clinton Administration has not released its plans for the submarine-launched ballistic-missile force beyond 1994. To assess the long-term effects of the options it presents in this study, the Congressional Budget Office constructed a base-case plan based on both formal and informal statements by the Navy. The plan assumes that the United States will deploy a force of 18 Trident submarines, each of which would eventually be equipped with its full complement of 24 D5 missiles.

A Brief Description of the SLBM Force

The SLBM force is made up primarily of the Trident submarine and the two types of missiles that are deployed on it--the C4 and the D5. The force also includes older Poseidon submarines, but those vessels will all be retired by the end of 1996. This study focuses on the modern Trident force that will continue to operate well into the next century.

The Trident Submarine

The Trident is the largest and most advanced ballistic-missile submarine in the U.S. fleet. At 560 feet long and 42 feet in diameter, it is significantly larger than any other American submarine and second in size only to the Russian Typhoon. (The next largest submarine in the Navy, the older Poseidon class that the Trident will eventually replace, is only 425 feet long and 33 feet in diameter.) With 24 missile tubes, the Trident also carries more missiles than any other submarine. (The Poseidon and the Typhoon carry 16 and 20 missiles, respectively.)

To enhance the Trident's survivability, the Navy designed it so as to minimize the noise that would make it detectable to Russian submarines. The long range of the Trident's missiles serves the goal of survivability as well by expanding the regions of the ocean in which it can operate.

Although the Navy designed the Tridents to last for 30 years, they could remain serviceable for a longer period. Experts have argued in the past that as a ballistic-missile submarine nears 30 years in service, many factors urge its retirement: fatigue in components from operating the reactor, stresses caused by submerging and surfacing, corrosion from seawater, and increases in the costs of maintenance associated with aging equipment. Indeed, the longest that the United States has kept a ballistic-missile submarine in the fleet is 30 years.

Over the past year, however, the Navy has been reevaluating the service life of the Trident. Officials suggest that the submarine might last as much as 10 years longer than its designed service life. The Navy will not have enough data until around 2001 to know for certain whether the submarines can be kept in service longer; nevertheless, it is cautiously

optimistic that it will be able to get from 5 to 10 more years of service from each of them.

Lacking the evidence necessary for greater certainty, the Navy continues to state that the expected service life of the Trident is 30 years. Accordingly, CBO also assumes that the Tridents will last for 30 years but notes, where appropriate, what effect the longer service life could have on the savings it has estimated for the options.

The D5 Missile

Under the base-case plan in this study, all Trident submarines will eventually be equipped with the D5 weapon system, which includes both the missile and its associated fire-control and navigation equipment. The D5 is a large missile, weighing about 130,000 pounds (see Table 1 on page 4). Because of its size, it can deliver a large number of more powerful (and heavier) warheads--specifically, 8 of the new W-88 warheads--at ranges as great as those of its predecessor. (The W-88 nuclear warhead reportedly has an explosive yield equivalent to 475 kilotons of conventional explosives and is much more effective than less powerful warheads in destroying targets that have been hardened to protect them against the effects of nuclear weapons.[1]) The D5 also has the option of carrying as many as 12 of the older W-76 warheads, each with an explosive yield of 100 kilotons.

Those "payloads"--the total weight of the warheads delivered by a missile--are impressive compared with many other missiles in the U.S. inventory. For example, the C4 and C3 SLBMs each carry eight 100-kiloton and ten 40-kiloton warheads, respectively, and the land-based Minuteman IIIA carries three 335-kiloton warheads. The MX intercontinental ballistic missile--to which the D5 is often compared--carries ten 300-kiloton warheads.

The D5 missile is also quite accurate. A missile's accuracy is commonly expressed by the circular error probable, a measure of the radius of the circle within which 50 percent of the missiles, on average, would land. (Actually, the CEP is a measure of a missile's inaccuracy, or the average distance by which it misses its target; consequently, a smaller CEP indicates greater accuracy.) Although the precise accuracy of all ballistic missiles is classified, the D5 missile reportedly has a CEP of 150 meters, which makes it more accurate than any of the U.S. ICBMs except the MX.[2] (The MX reportedly has a CEP of 100 meters.[3]) In terms of previous generations of SLBMs, the CEP of the D5 is half that of its immediate predecessor, the C4, and is even more impressive compared with the accuracy of earlier missiles. (The C3 had a CEP of 450 meters, and the missile it replaced, the A3, had a CEP of 900 meters.)

In designing the D5 missile, the Navy planned on its lasting for 20 years, but it now expects the missile to last for 25 years. Given the production schedule for the D5 in this study's base-case plan, the missiles should last as long as the current generation of Trident submarines, assuming that the submarines remain in service for 30 years.

The C4 Missile

The Navy developed the C4 to increase the range and payload of missiles carried by the older Poseidon fleet of submarines and to provide a capable new missile to deploy in the early Trident submarines until the D5 could be developed. Production of the C4 thus began in 1977 and ended in 1987. Because it is smaller than the D5, the C4 missile carries a smaller payload; it is also less accurate (see

1. For a detailed discussion of the relative abilities of the W-88 and the W-76 warheads to destroy hardened targets, see Congressional Budget Office, *Trident II Missiles: Capability, Costs, and Alternatives* (July 1986).

2. See Congressional Budget Office, *The START Treaty and Beyond* (October 1991); and International Institute for Strategic Studies, *The Military Balance: 1992-1993* (London: Brassey's, 1992).

3. For purposes of comparison, the Minuteman III Mark 12A has a CEP of 200 meters and the Minuteman II, a CEP of 600 meters.

Table 2.
Authorization and Delivery Dates for the Navy's Trident Submarines

Submarine Name	Hull Number	Authorization Date (Fiscal year)	Delivery Date
		Submarines Equipped with C4 Missiles	
Ohio	726	1974	October 1981
Michigan	727	1975	September 1982
Florida	728	1975	June 1983
Georgia	729	1976	February 1984
Henry M. Jackson	730	1977	October 1984
Alabama	731	1978	June 1985
Alaska	732	1978	February 1986
Nevada	733	1980	October 1986
		Submarines Equipped with D5 Missiles	
Tennessee	734	1981	November 1988
Pennsylvania	735	1983	August 1989
West Virginia	736	1984	September 1990
Kentucky	737	1985	June 1991
Maryland	738	1986	May 1992
Nebraska	739	1987	August 1993[a]
Rhode Island	740	1988	August 1994[a]
Maine	741	1989	August 1995[a]
Wyoming	742	1990	August 1996[a]
To Be Announced	743	1991	August 1997[a]

SOURCE: Congressional Budget Office based on Department of Defense data.

a. Estimated delivery date; not yet in the fleet.

Table 1 on page 4). Therefore, it is not capable of destroying most types of hardened targets.[4]

Because the Navy expected the C4 to be an interim missile, it was designed to last only about 10 years--long enough to retire the older Poseidons and develop the D5 missile. As the D5 became available, the Navy had planned to modify, or "backfit," the eight Trident submarines that were initially deployed with the C4 so that the ships could carry D5 missiles. It now plans to wait until 1996 before deciding whether to perform the backfit.

Status of the Current Fleet

The current SLBM force consists of 13 Trident submarines (see Table 2 and Figure 1). Eight of those vessels are equipped with the C4 missile; they operate in the Pacific and are based at Bangor, Washington. The other five are equipped with D5 missiles and operate in the Atlantic; they are deployed at Kings Bay, Georgia. The force also includes six old Poseidon submarines, which are equipped with C4 missiles and are deployed at Charleston, South Carolina. By the end of 1996, the Navy expects to retire all of the Poseidon submarines.

As of November 1992, the Navy's inventory of ballistic missiles included about 415 C4 missiles--288 deployed on submarines and 127 held for testing. By the end of 1993, the United States will have purchased 295 D5 missiles, about 230 of which have been delivered.

Base-Case Plan for the SLBM Force

How might the SLBM force change over the next decade? So far, the Clinton Administra-

4. For a more comprehensive discussion of the capabilities of these missiles, see Congressional Budget Office, *The START Treaty and Beyond.*

tion has provided a detailed plan only for 1994. It will not announce a long-range plan for any defense forces until late 1993 or early 1994. To provide a basis for assessing various options for the SLBM force over the long term, CBO defined a base-case plan founded on recent statements by the Navy about its plans for the force through 1999. Beyond 1999, the base-case plan reflects unofficial Navy statements about its desired long-range plans.

In general, the base-case plan assumes that the Navy will deploy 18 Trident submarines, all carrying the D5 missile. It will continue to deploy 24 missiles per submarine and will achieve the reductions in the number of SLBM warheads mandated by the second Strategic Arms Reduction Talks Treaty by deploying four warheads on each missile (instead of the larger number that the missile was designed to carry).

Number of Trident Submarines

The 18 Trident submarines assumed in the base-case plan will be in place by the end of 1997, when the last Trident now under construction enters the fleet and all the Poseidon submarines have been retired (see Figures 1 and 2). A fleet of 18 ships represents a reduction compared with the Navy's earlier plans. In the mid-1980s, the service planned to deploy 20 or more Trident submarines, but in

Figure 1.
Total Ballistic-Missile Submarine Inventory Under the Base-Case Plan, 1960-2020

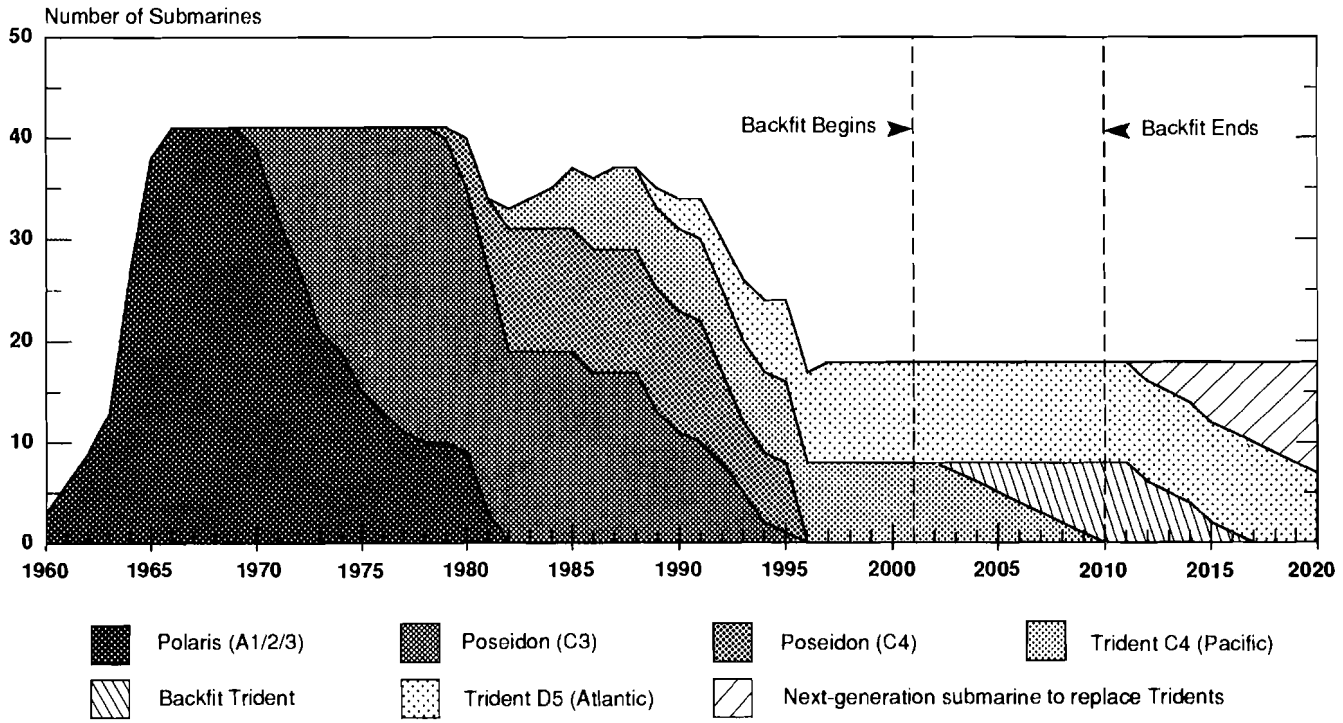

SOURCE: Congressional Budget Office.

NOTES: The backfit is the process by which the Navy would modify its C4-equipped Trident submarines to carry D5 missiles. Because the Clinton Administration has not released its long-term plan for the Trident force, the Congressional Budget Office has defined a base-case plan to provide a benchmark for assessing the effects of the options. The base-case plan assumes that the Trident submarines will be retired after 30 years of service.

1991 the Bush Administration announced that it would halt production after the 18th ship. The decision reflected the revolutionary changes occurring throughout Eastern Europe and the former Soviet Union in the late 1980s and the accompanying pressure to reduce the defense budget. But several additional shifts have occurred since the decision to halt production was made: the Soviet Union has disintegrated, the Warsaw Pact has disbanded, and the Russian military has begun to experience acute funding shortages that are forcing it to cut back on its antisubmarine forces. Those changes suggest to some critics of the Trident program that there is no longer a need for all 18 submarines.

Figure 2.
Status of the Trident Ballistic-Missile Submarines Under the Base-Case Plan, 1990-2030

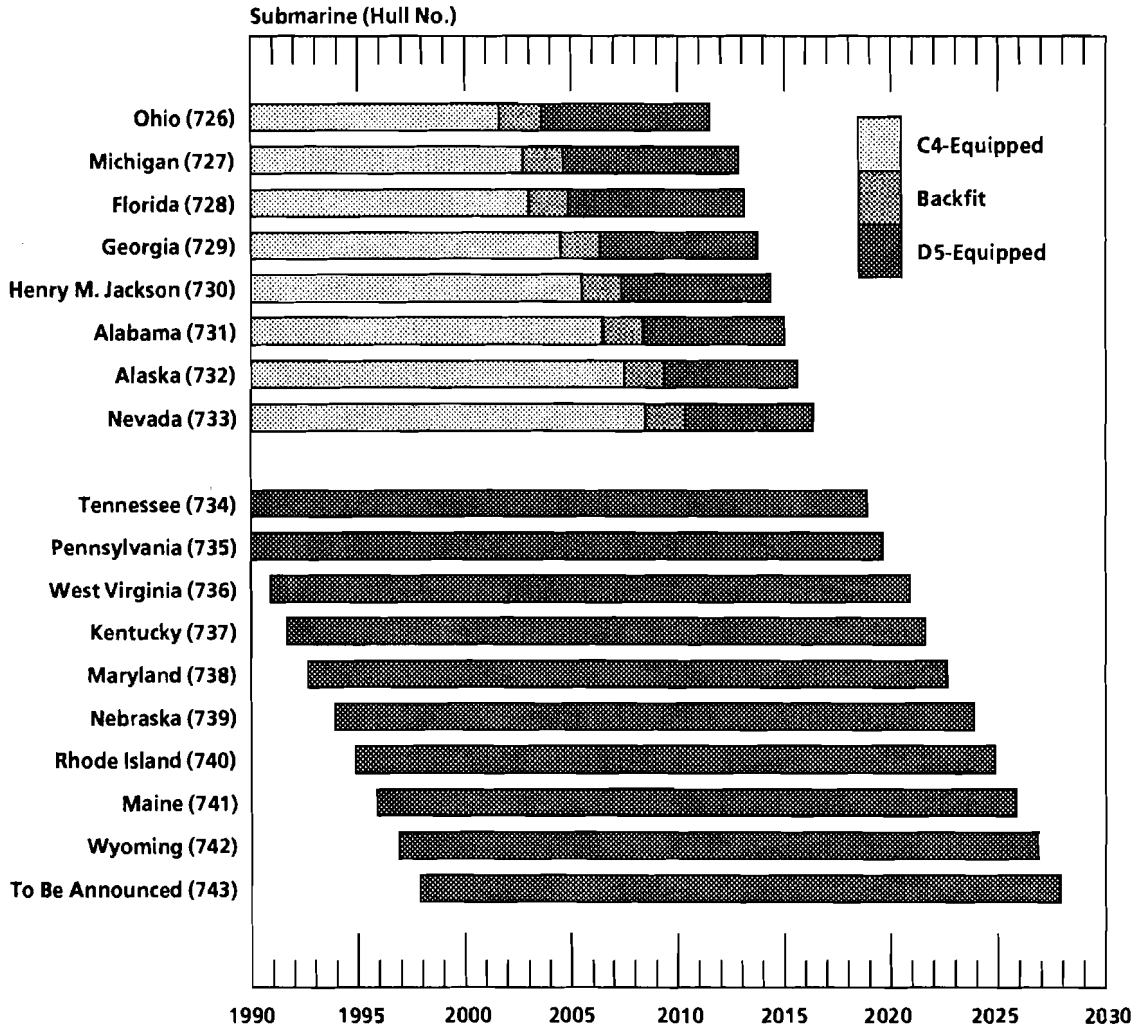

SOURCE: Congressional Budget Office based on U.S. Navy data.

NOTES: The backfit is the process by which the Navy would modify its C4-equipped Trident submarines to carry D5 missiles.

Because the Clinton Administration has not released its long-term plan for the Trident force, the Congressional Budget Office has defined a base-case plan to provide a benchmark for assessing the effects of the options.

The base-case plan assumes that the Trident submarines will be retired after 30 years of service.

Portion of the Fleet Equipped with D5 Missiles: The Backfit Issue

The Bush Administration's plans called for the first eight Trident submarines, which are currently equipped with the older C4 missile, to be modified, or backfitted, to carry the D5 missile. Those plans delayed the backfit program, originally scheduled to begin in 1991, until early in the next decade. Now, however, budget pressures have forced the Navy and the Congress to reexamine the program. The service says that it will wait until 1996 to decide whether to incur the expense of buying the D5 missiles and installing them in the eight older Tridents, or to keep the C4 missiles in service until those submarines retire.

The base-case plan in this study assumes that the Navy decides to carry out the full backfit, starting in 2001 and continuing through 2010 (see Table 3 below and Figure 2 on page 13). Although the backfit is expensive, changing this assumption would not greatly alter the total costs of the SLBM force. If the Navy cancels the backfit, it would probably make the large investment necessary to substantially extend the service life of the older C4 missiles and the other components of the C4 weapon system that are now deployed on the eight older submarines. The Navy estimates that the cost to extend the service lives of that system would be almost as large as the cost of the backfit (see Chapter 3 for a discussion of those costs).

During a backfit, the Trident submarine would be taken to a shipyard where it would undergo modifications--mainly involving the launch tubes that carry the missiles and the fire-control system. The Navy designed the missile tubes within the pressure hull of all Trident vessels to be large enough for D5 missiles. But to accommodate the smaller C4 missile on the first eight Tridents, it inserted appropriately sized launch tubes into the larger missile tubes (see Figure 3). (Launch tubes are the precisely machined tubes that actually hold the missiles; they are inserted into the larger missile tubes, which are part of the pressure hull of the submarine.) During the backfit, the C4 launch tubes would be removed and new, larger launch tubes for the D5 installed. Besides modifying the tubes, the Navy must install a new fire-control system (to permit the backfitted submarine to operate D5 missiles) and a new system for ejecting the missile from the submarine when it is launched.

Backfitting removes the submarine from service for more than a year. As a result, the

Table 3.
Backfit Schedule for the Navy's C4-Equipped Trident Submarines Assumed Under the Base-Case Plan

Submarine Name	Hull Number	Starting Date	Completion Date
Ohio	726	June 2001	May 2003
Michigan	727	July 2002	June 2004
Florida	728	October 2002	September 2004
Georgia	729	April 2004	March 2006
Henry M. Jackson	730	April 2005	March 2007
Alabama	731	April 2006	March 2008
Alaska	732	April 2007	March 2009
Nevada	733	April 2008	March 2010

SOURCE: Congressional Budget Office based on Department of Defense data.

NOTES: The backfit is the process by which the Navy would modify its C4-equipped Trident submarines to carry D5 missiles.

Because the Clinton Administration has not released its long-term plan for the Trident force, the Congressional Budget Office has defined a base-case plan to provide a benchmark for assessing the effects of the options.

Figure 3.
Cross-Sectional View of C4 and D5 Missiles in a Trident Submarine

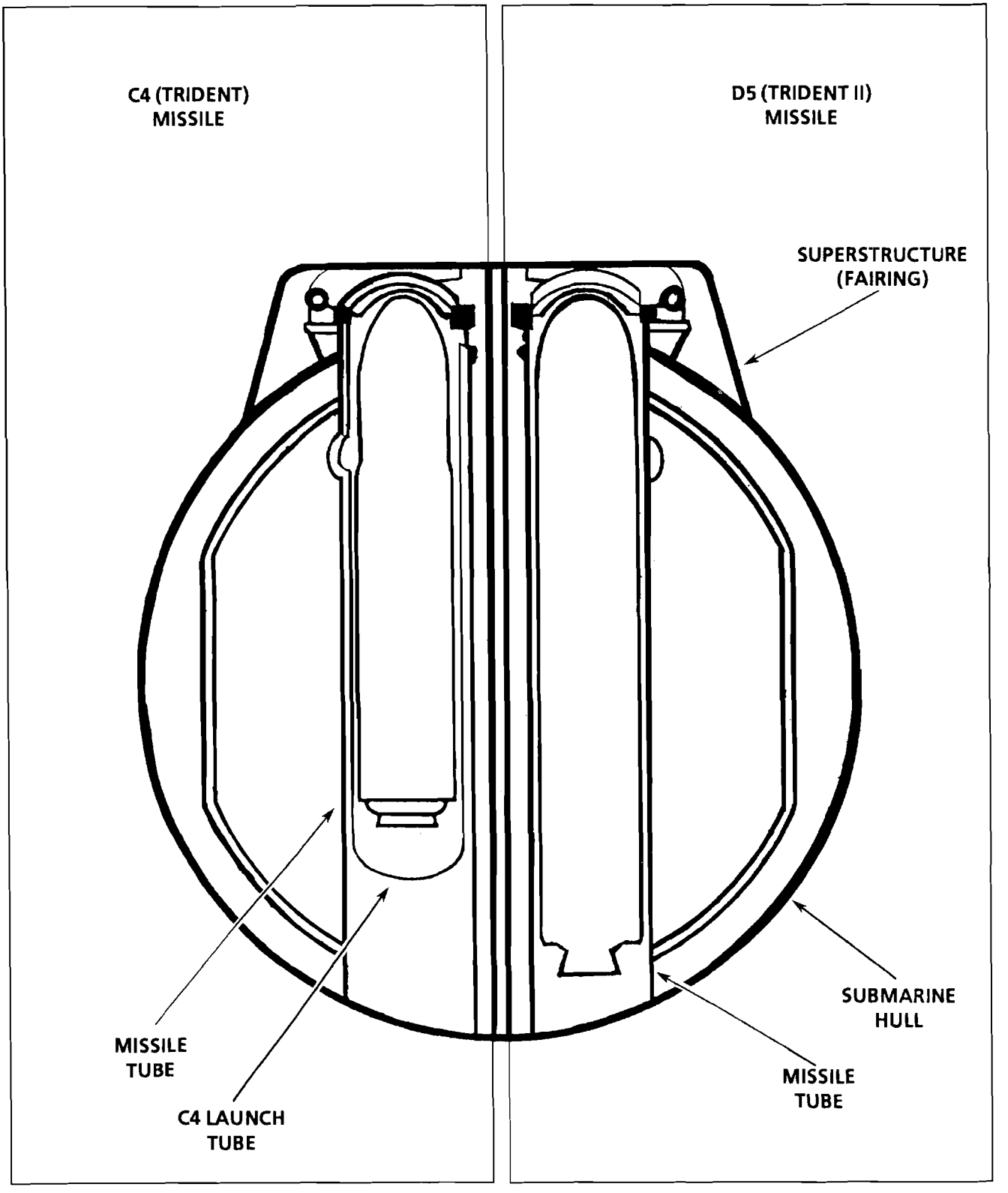

SOURCE: Congressional Budget Office based on a figure from the U.S. Navy.

Navy plans to conduct it during one of the major overhauls that are scheduled for each submarine about every 10 years. For the C4 Tridents, the first major overhaul period began in 1993, and it was at this time that the Navy planned to perform the backfit. But in budget plans submitted in January 1991, the Bush Administration delayed the backfit of the first eight submarines. Consistent with current plans, CBO's base-case plan assumes that the backfit will begin in 2001.

Even if the Navy backfits the submarines, it must spend $2.3 billion to keep the C4 missile in service through 2008, when the last C4 submarine enters overhaul and the last C4 missiles are retired. (All costs throughout this study are expressed in 1994 dollars of budget authority.) Two-thirds of that funding will provide operational support and fund the conduct of flight tests and the associated data analysis. Keeping the missile in service also requires that the Navy purchase enough equipment to continue the C4 flight-test program.

Number of Missile Tubes per Submarine and Warheads per Missile

The original design of the Trident submarine called for 24 missile tubes, and all 18 ships will be built to carry that many. Although the number of tubes could be altered, no plan for the SLBM force thus far has proposed changing it. Consequently, the base-case plan assumes that each submarine operates with 24 tubes.

The plan assumes changes, however, in the number and type of warheads to be carried on the D5 missiles that go into the 24 tubes, to comply with the limit on SLBM warheads in the START II treaty. Under the base-case plan, each D5 missile would carry 4 warheads. When the Navy drew up its original plans for the D5, the missile was to carry as many as 12 small or 8 large warheads. But the first START treaty limited that number to 8 warheads of either type. If the recently signed START II treaty is ratified, it would restrict the total number of warheads in the SLBM force to 1,750--about half of what the Navy had planned to deploy under START I (see Box 1). To accommodate the START II limit, the Bush Administration planned to reduce the number of warheads on each D5 missile to 4, a

Box 1. The START II Treaty and the Trident Force

Following quickly on the heels of the completed Strategic Arms Reduction Talks Treaty, Presidents Bush and Yeltsin agreed in June 1992 to the framework for another round of deep cuts in their arsenals. That agreement called for a new treaty that would build on the warhead reductions and elaborate inspection provisions achieved in the START treaty. Recently completed and signed by Bush and Yeltsin, the new treaty--START II--will eliminate all multiple-warhead intercontinental ballistic missiles, reduce the portion of the bomber force dedicated to nuclear missions, and reduce the number of warheads on submarine-launched ballistic missiles to 1,750. Yet despite the limit on SLBM warheads, the restrictions on bombers and ICBMs will increase the United States' reliance on its Trident force for deterrence during peacetime.

START II limits will probably reduce the U.S. and Russian arsenals to roughly 3,500 and 3,000 countable warheads, respectively. As the treaty now stands, it will rely largely on the protocols for verification and conversion negotiated in START I, although it makes some changes where necessary.

Two such changes will significantly affect the Trident force. First, the 1,750-warhead limit on the SLBM force will reduce the number of Trident warheads by half. Before START II, the Navy planned to deploy 3,456 warheads on its Trident fleet: 8 loaded on each of the 24 missiles carried by 18 submarines. Second, in contrast to START I, the agreement explicitly allows the United States to reduce the number of warheads on its D5 and C4 missiles (often called downloading) from 8 to 4 without having to develop a new front end (the section that carries the warheads) for the missile that would carry no more than the smaller number of warheads.

Those two changes to START I make it possible for the United States to keep 24 missiles on each Trident submarine, provided each missile carries only four warheads. Indeed, current plans assume such a course. The Navy thus will deploy the same number of D5 missiles under START II that it planned to deploy under START I.

reduction that the treaty explicitly permits. The base-case plan assumes that the Bush plan is carried out.

The Navy has also changed the nature of the warheads to be carried on the D5 missiles: it now appears that the bulk of them will carry the smaller W-76 warhead. Only about one-quarter of the D5s are likely to be equipped with the larger W-88 warheads, which were designed to attack the so-called counterforce targets discussed in Chapter 1. The United States stopped manufacturing the W-88 in 1992 after reportedly producing about 400 of them--well short of the several thousand that were called for under the plans of the Reagan Administration. (Classification prohibits access to information detailing exactly how many W-88 warheads the Reagan Administration planned.) Currently, there is no indication that the Department of Energy will resume production.

Several factors may explain the early end of W-88 production. First, the Department of Energy closed its plutonium processing plant at Rocky Flats in December 1989 because of serious environmental and safety problems. The plant, which manufactures the hollow, grapefruit-size shells of plutonium called pits that are key components of nuclear weapons, was in the early stages of making pits for the W-88 warheads. Second, the end of the Cold War may have encouraged the Bush Administration not to seek a new production facility.

The D5 Flight-Test Program

The number of D5 missiles that the Navy must buy depends not only on how many missiles it deploys on submarines but also on the size of the program of flight testing it plans. The flight-test program is meant to ensure that the missile works as designed; it also establishes performance capabilities and ensures that those capabilities do not change significantly over time.[5] The size of the flight-test program has a substantial effect on costs: each test consumes a $30 million missile and, according to the Navy, costs roughly $2 million to conduct (excluding the cost of operating the test range). In response to the size of those costs and the better-than-expected reliability of the D5 missile, the Navy recently decided to halve the size of its flight-test program.

Types of Flight Tests. The Navy's flight-test program has three distinct portions, each designed to fulfill specific requirements that the Navy has established using guidance from the Joint Chiefs of Staff. The Commander-in-Chief (CINC) Evaluation Test (CET) portion of the flight-test program--conducted over the first few years that missiles are deployed--is designed to establish baseline reliability, accuracy, and range.[6] To detect any age-related deterioration in the missile's reliability and accuracy, as established during the CET program, the Navy conducts annual flight tests--known as the Follow-On CINC Evaluation Test (FCET) program--after the CET portion is complete.[7] The Demonstration and Shakedown Operation (DASO) portion includes flight tests from a submarine to ensure that the submarine functions properly after it is commissioned and each time it completes a major overhaul. DASO tests also allow the Navy to try out solutions to problems in a more controlled environment than is possible with operational testing. (See Appendix A for more details about the D5 flight-test program.)

In addition to the flight tests, the Navy conducts an extensive program of nondestructive ground tests and surveillance designed to detect problems as the missile ages that could affect its reliability or accuracy. Those tests complement the FCET program and can re-

5. For an extensive analysis and description of the D5 testing program, see Congressional Budget Office, "Trident II Missile Test Program," Staff Working Paper (February 1986). The discussion in this section is based on that paper, updated to reflect program changes.

6. These tests are also referred to as operational tests (OT). To be consistent with the Navy's terminology, CBO uses the CET label.

7. These tests are also referred to as follow-on operational tests. To be consistent with the Navy's terminology, CBO uses the FCET label.

duce the need for the more expensive flight tests.

Flight Tests Under the Base-Case Plan. The base-case plan reflects the Navy's current program for D5 testing, which would use 190 missiles. Twenty-eight missiles have already been expended on operational tests (or CETs) during the first three years that the missile has been deployed. The Navy recently completed that program. Follow-on tests (FCETs) will consume another 120 missiles--at the rate of six flight tests per year over 20 years. Finally, the base-case plan assumes that the Navy will launch another 42 missiles during DASOs.

Number of D5 Missiles That the Navy Requires

Under the base-case plan, the Navy would need to procure 628 D5 missiles to equip 18 Trident submarines and support the planned flight-test program. The total program would number 656 missiles if the 28 missiles that the Navy used during the development of the D5 are included. Before the Navy reduced the size of its flight-test program earlier this year, it had planned to buy 779 missiles in addition to the 28 development missiles.

Production of the D5 missile began in 1987, and through 1993, 295 missiles have been bought (or authorized). The Clinton Administration has proposed buying 24 missiles in 1994, a rate that the Navy intends to sustain until it has purchased the number of missiles it requires. Accordingly, under the base-case plan, procurement would continue at the rate of 24 missiles per year until 2007 (see Table 4). The British will continue to buy D5 missiles through 1997 for their four Trident submarines, each of which has 16 tubes.

Because the D5 program is well beyond the development phase and those 28 missiles have already been expended, this study focuses on the other 628 missiles. Of that total, 408 would be deployed on 17 submarines (at least one submarine will be in a shipyard undergoing an overhaul at any one time), and 30 extra missiles would be occupied in maintenance and nondestructive testing--known as the Fleet Return Evaluation Program. The Navy would use the remaining 190 missiles to conduct the flight-test program (see Table 5).

Table 4.
Acquisition Schedule for the D5 Missile Under the Base-Case Plan

Fiscal Year	Number Purchased[a]	Cumulative Total
	Past Authorization	
1987	21	21
1988	66	87
1989	66	153
1990	41	194
1991	52	246
1992	28	274
1993	21	295
	Under the Base-Case Plan	
1994	24	319
1995	24	343
1996	24	367
1997	24	391
1998	24	415
1999	24[b]	439
2000	24	463
2001	24	487
2002	24	511
2003	24	535
2004	24	559
2005	24	583
2006	24	607
2007	21	628[c]

SOURCE: Congressional Budget Office derived from Department of Defense data.

NOTE: Because the Clinton Administration has not released its long-term plan for the submarine-launched ballistic-missile force, the Congressional Budget Office (CBO) has defined a base-case plan to provide a benchmark for assessing the effects of the options it examines.

a. The numbers exclude missiles for the United Kingdom's Trident program.

b. According to data provided to the Congress by the Department of Defense (DoD) in early 1993, DoD would have concluded D5 procurement in 1999 with 13 missiles. However, CBO's base-case plan assumes that the Navy will decide in 1996 to convert the eight C4-equipped submarines to carry D5 missiles, which will require purchasing an additional 200 missiles.

c. The total excludes 28 missiles used for research and development.

The number of missiles in each of those categories is approximate, however, and will change with time as the number of submarines being overhauled changes. For example, in 1998, the Navy expects to reach a peak of 18 submarines that will be deployed or that must be filled with missiles. But for much of the next 20 years, only about 16 submarines will be deployed. Nevertheless, the size of the D5 program assumed in the base-case plan (628 missiles) provides a good estimate of the total number of missiles required to support the fleet until the submarines are retired.

Table 5.
Distribution of D5 Missiles Under the Base-Case Plan

Category	Number of Missiles[a]
Deployed on Submarines[b]	408
Fleet Return Evaluation Program[c]	30
Flight-Test Program	
Operational tests (CETs)	28
Follow-on tests (FCETs)	120
Demonstration and Shakedown Operations	42
Subtotal	190
Total	628

SOURCE: Congressional Budget Office based on data from the U.S. Navy.

NOTES: Because the Clinton Administration has not released its long-term plan for the submarine-launched ballistic-missile force, the Congressional Budget Office has defined a base-case plan to provide a benchmark for assessing the effects of the options it examines.

CINC = Commander-in-Chief; CET = CINC Evaluation Test, the Navy's term for operational tests; FCET = Follow-On CINC Evaluation Test.

a. The base-case plan will require 628 missiles. The numbers of missiles deployed on submarines and in the follow-on test program are approximate and will change as the number of submarines being overhauled changes. The numbers of missiles allocated to operational tests, Demonstration and Shakedown Operations, and the Fleet Return Evaluation Program should not change.

b. Twenty-four missiles will be deployed on 17 submarines, which assumes that at least one submarine is being overhauled at any given time.

c. The Fleet Return Evaluation Program provides a reserve so that enough missiles will be available for scheduled deployments even though some missiles are being transported, dismantled, inspected, or reassembled.

Operating Tempo

Another important aspect of current plans for the SLBM force is the amount of time that the submarines would spend at sea--usually called the operating tempo. The operating tempo influences the costs for personnel as well as other operating costs. Under the base-case plan, which follows current Navy practice, two-thirds of the Trident submarine fleet would be deployed at sea at any one time. The remaining third would either be undergoing overhaul or maintenance or preparing for another 70-day deployment at sea.

The Navy considers this relatively high operating tempo, which the United States has maintained for many years, an efficient way to ensure that it has enough ballistic-missile submarines at sea to retaliate with substantial force following a nuclear attack--and provide a deterrent against attack in the first place. To keep two-thirds of the submarine force at sea while making Trident duty bearable for sailors, the Navy assigns each submarine two crews that alternate deployments. When a submarine comes back from patrol, a new crew takes over, readies the submarine, and takes it for the next patrol. The crew members who are left behind rest and train.

How Much Will the Base-Case Plan Cost?

Under the base-case plan, the cost to operate and modernize the SLBM force would amount to $2.7 billion in 1994 and would total $17.4 billion over the next six years, 1994 through 1999 (see Table 6). To capture costs throughout the period in which D5 missiles are purchased, this study also estimates costs through 2010. Assuming that the Navy retires its Tri-

dent submarines after 30 years of service, as it now plans, operating and modernizing the SLBM force would cost a total of $62.2 billion from 1994 through 2010. That total includes $10.1 billion to procure D5 missiles ($4.2 billion for 10 D5-equipped submarines and $5.9 billion for the 200 missiles required for the backfit), $2.3 billion to support the C4 weapon system until the backfit is complete, $2.6 billion to backfit the eight C4 submarines and modify facilities on the West Coast, $14.6 billion to operate and support the submarines, and $17.0 billion to maintain the readiness and reliability of the missiles and weapon systems.

To keep the size of the Trident fleet at 18 ships, the Navy would have to spend the remaining $15.6 billion beginning in the next decade to procure submarines to replace some Tridents. By 2011, the older ones will have been in service for about 30 years and begun to retire.

Table 6.
Costs of the SLBM Force Under the Base-Case Plan
(In billions of 1994 dollars of budget authority)

	1994	1995	1996	1997	1998	1999	Total, 1994-1999	Total, 1994-2010: Replace Submarines After 40 Years	Total, 1994-2010: Replace Submarines After 30 Years
Procuring D5 Missiles (Excluding missiles for backfit)	1.1	1.0	0.7	0.5	0.5	0.4	4.2	4.2	4.2
Backfitting Trident Submarines Equipped with C4 Missiles (2001-2010)[a]	0	0	0.2	0.4	0.8	1.0	2.3	8.5	8.5
Supporting C4 Missiles Until the Backfit Is Complete (2008)	0.1	0.2	0.2	0.2	0.2	0.2	1.0	2.3	2.3
Operating the SLBM Force	0.6	0.6	0.6	0.7	0.7	0.7	3.9	14.6	14.6
Maintaining the Readiness and Reliability of the C4 and D5 Missiles and Weapon Systems	1.0	1.0	1.0	1.0	1.0	1.0	6.0	17.0	17.0
Designing and Procuring Replacement Submarines	0	0	0	0	0	0	0	0	15.6[b]
Total	2.7	2.8	2.7	2.7	3.2	3.3	17.4	46.6	62.2

SOURCE: Congressional Budget Office derived from Department of Defense data.

NOTE: Because the Clinton Administration has not released its long-term plan for the submarine-launched ballistic-missile force, the Congressional Budget Office has defined a base-case plan to provide a benchmark for assessing the effects of the options it examines.

SLBM = submarine-launched ballistic missile.

a. The backfit is the process by which the Navy would modify its C4-equipped Trident submarines to carry D5 missiles. This estimate includes $5.9 billion to purchase the 200 D5 missiles that the Navy judges it will require to support the eight backfitted submarines. It also includes $2.6 billion to modify the submarines, outfit the training facilities on the West Coast, and undertake various construction projects.

b. The estimate assumes that the costs of designing and building a replacement for the Trident would equal the costs of designing and building the Trident.

The Navy hopes to keep its Trident submarines in the fleet longer than 30 years and thereby delay some of those replacement costs, but it will not have the information it needs to make that decision until shortly after the turn of the century. If the Navy could keep the Tridents in service for 40 years, it would not have to purchase any replacements until after 2010, and the cost of operating and modernizing the force through 2010 could be as low as $46.6 billion. (That figure excludes any costs that the Navy would incur to extend the service life of the submarines from 30 to 40 years.) Because it is not clear whether the Navy will be able to extend the service life of the submarines, this study estimates costs under both assumptions.

What Influences Costs?

The Navy's costs during the 1994-2010 period have many components: buying D5 missiles, operating the submarine fleet, maintaining the readiness and reliability of the C4 and D5 weapon systems, conducting the backfit, extending the life of the C4 missile until the backfit, conducting flight tests, and eventually developing and buying replacements for the Trident submarine.

Over the next six years (1994-1999), the first three categories will dominate costs under the base-case plan. Purchasing D5 missiles would require expenditures of $4.2 billion (see Table 6). Operating the submarines, which will cost about $700 million a year once all 18 Tridents are deployed, would cost a total of $3.9 billion during the 1994-1999 period. Maintaining the readiness of the missiles and weapon systems will cost $1 billion annually and $6 billion through 1999. Together, those three categories account for more than three-quarters of the total costs of the SLBM force over the next six years.

During the next decade (2000-2010), as D5 production ends, the cost of operating the fleet and replacing the Trident submarines would dominate SLBM costs. If today's Tridents retire after 30 years of service, those retirements would begin in 2011. It takes from six to seven years to build a submarine and another year to get it ready to enter the fleet. Consequently, the Navy would have to begin purchasing replacements around 2003 to maintain the fleet of 18 Tridents envisioned in the base-case plan. Development would have to start around the year 2000.

The estimates in this study assume that the costs to develop a new submarine are the same as those for the Trident fleet--$2 billion--and that the cost of replacement submarines is the same as that of current vessels--$1.7 billion. Those assumptions may understate the likely costs, however, because historically at least, replacements have cost more--sometimes substantially more--than the ships they replace. That growth in cost between successive generations of submarines may abate, however, with the end of the Cold War.

Chapter Three

Options That Continue D5 Procurement Through 1999

Some Members of Congress and some defense analysts have suggested that the Navy scale back its plans for modernizing the submarine-launched ballistic-missile force and perhaps reduce its size. They argue that the rapid changes in the former Soviet Union have made the risk of nuclear war remote and deterrence easier and that domestic budget pressures have made large nuclear forces a luxury that the United States cannot afford. Others argue that no changes should be made to the SLBM force because it will provide a central component of the U.S. nuclear deterrent under the second Strategic Arms Reduction Talks Treaty.

The debate over the future of the SLBM force centers around the question of what size and type of nuclear force would provide adequate deterrence. The SLBM force is only one leg of a triad that also includes bombers and intercontinental ballistic missiles; the options considered in this analysis assume that those other forces remain unchanged from the levels planned by the Department of Defense. This assumption is made for the sake of clarity and does not imply a judgment about the balance between the legs of the triad that DoD plans under the START II treaty.

Most of the options would not measurably change the number or explosive power of the SLBM warheads and thus would not affect the size of U.S. deterrent forces. Nor would they affect the number of warheads deployed at sea (so-called survivable warheads), which are highly invulnerable to attack. They may affect other characteristics of the force, however, including the ability to destroy some targets that have been hardened to resist the effects of nuclear weapons, the ability of the force to cover widely dispersed targets, the number of submarines deployed at sea, and the range of the missiles. In addition, some options may affect the force's ability to respond to an unexpected increase in the threat of nuclear war, perhaps from a remilitarized and hostile Russia.

The options that reduce the number of submarines in the fleet are designed under the assumption that the START II treaty is ratified by both the United States and Russia. Without the treaty, the United States would have to make unilateral reductions in the size of its SLBM force if it chose to implement one of those options. Such actions are not without precedent: President Bush acted unilaterally in September 1991 when he retired or canceled the production of many short-range nuclear weapons and reduced the peacetime readiness of the bomber force and some submarine-launched and land-based missiles.

Alternatively, even if START II is not ratified, Russia and the United States could agree to act according to the terms of the treaty in much the same way that the Soviet Union and the United States adhered to the basic numerical limits of the second Strategic Arms Limitation Talks (SALT II) Treaty despite President Jimmy Carter's decision in 1980 not to pursue ratification. That kind of action might make sense if Russian President Boris Yeltsin believed he could not get the START II treaty ratified by the tumultuous Congress of People's Deputies, or if Ukraine does not ratify

START I. (Provisions in the START II treaty require that START I be ratified before START II can become effective.)

The first option in this chapter would reduce the degree of modernization in the SLBM force by canceling the backfit program for equipping older Trident submarines with the D5 missile. The second option would reduce the size of the fleet from 18 to 10 submarines but modernize fully those vessels that remain. The third option, a more moderate approach than Option II, would reduce fleet size somewhat (from 18 to 14 ships) but modernize all of the ships that remain. The savings from these options would vary widely.

Option I: Reduce Modernization

Reducing the degree of modernization planned for the SLBM force by canceling the program to backfit older submarines with the D5 missile is particularly popular a option among critics of the D5 program. It is also an option that the Navy is seriously considering as an alternative to the base-case plan. In the post-Cold War period, why, critics ask, should money be spent to replace the C4 missile on the eight oldest Trident submarines and backfit them with the D5 missile? The Congressional Budget Office's analysis suggests that the reduced capability associated with canceling the backfit may be acceptable because of the recent moderation in the threats to U.S. security. But this option would not save much money--at least not given the Navy's estimates of the cost to refurbish the C4 weapon system (the missiles and their associated hardware) so that it can remain in service. If the Navy does not have to replace the motors on the C4 missiles, the savings from the option would be greater.

What Specific Changes Would Be Made?

If the Navy reduces the degree of modernization by canceling the backfit program, the eight oldest Trident submarines would continue to carry C4 rather than D5 missiles until the last submarine is retired in 2016 (assuming that the ships remain in the fleet for about 30 years). That action would eventually result in 192 fewer D5 missiles deployed in the SLBM force.

Under this approach, the Navy would buy 200 fewer D5 missiles than under the base-case plan--192 fewer for deployment on submarines and 8 fewer for the Demonstration and Shakedown Operations program (see Table 7). In all, the Navy would have to purchase 428 missiles, 133 of which have yet to be bought. Because there would be fewer D5 submarines, there would be a corresponding decrease in the number of overhauls. Consequently, the DASO program would be trimmed to 34 missiles for this option to maintain the Navy's policy of launching one missile from each submarine after it emerges from an overhaul.

This analysis assumes that the Navy would accommodate the smaller purchase of missiles by continuing D5 procurement at its planned rate of 24 per year, but only through 1999 rather than through 2007 as anticipated under the base-case plan. The analysis also assumes that the service life of the C4 weapon system, including the missile and its associated systems, would be extended so that it could remain in the fleet well into the next decade. C4 flight tests would also have to be continued to ensure that the missiles remained reliable.

A variation of this approach that is sometimes discussed would go even further, canceling the backfit but also deploying C4 rather

Table 7.
Options for Restructuring the Trident SLBM Force

Option	Number of Submarines (D5/C4)	Backfit[a]	Missiles per Submarine	Warheads per Missile	Total SLBM Warheads	Test Program (Missiles per year)	Total Missiles Bought[b]	D5 Procurement Terminated After
Base-Case Plan[c]	18 (18/0)	Yes	24	4	1,728	6	628 (333)	2007
Options That Continue D5 Missile Procurement Through 1999								
I. Reduce Modernization (Cancel Backfit)	18 (10/8)	No	24	4	1,728	6	428 (133)	1999
II. Reduce Fleet Size	10 (10/0)	No	24	7	1,680	6	428 (133)	1999
III. Reduce Fleet Size Moderately	14 (14/0)	Yes[d]	24	5	1,680	6	528 (233)	2003
Options That End D5 Missile Procurement Quickly								
IV. Reduce Modernization and Tubes per Submarine	18 (10/8)	No	12	8	1,728 (1,248)[e]	6	315 (20)	1994
V. Reduce Fleet Size, Tubes per Submarine, and Flight-Test Program	10 (10/0)	No	12	8	960[f] (840)[e]	5	295 (0)	1993

SOURCE: Congressional Budget Office derived from Department of Defense data.

NOTE: SLBM = submarine-launched ballistic missile.

a. The backfit is the process by which the Navy would modify its C4-equipped Trident submarines to carry D5 missiles.

b. The numbers in parentheses indicate the number of missiles that must still be purchased in 1994 and beyond. All totals exclude the 28 missiles bought for research and development.

c. Because the Clinton Administration has not released its long-term plan for the SLBM force, the Congressional Budget Office has defined a base-case plan to provide a benchmark for assessing the effects of the options it examines.

d. Only four C4-equipped submarines would be converted to carry D5 missiles in Option III. The others would be retired at the rate of roughly one per year starting in 2001.

e. The numbers in parentheses indicate the number of warheads permitted under the second Strategic Arms Reduction Talks Treaty (START II) if deactivating missile tubes on Trident submarines (detubing) is not permitted. Option IV assumes that the C4 submarines would not be detubed in that case.

f. Under Option V, the United States could keep the total number of its deployed strategic warheads at 3,500--the level planned under the START II treaty--by increasing the number of warheads carried by bombers. If detubing is not allowed, the United States could keep only about 3,400 deployed strategic warheads.

than D5 missiles on the four newest Trident submarines currently under construction. That approach--which might actually cost more than completing the backfit--is discussed in Appendix B.

What Are the Effects on Capability?

In concert with land-based missiles and bombers, the goal of the SLBM force is to deter nuclear war. Until recently, deterrence was measured in traditional Cold War terms: for example, the number of deployed warheads, the number of warheads that could survive an attack (so-called survivable warheads), the number of submarines deployed at sea, the range of ballistic missiles, the ability to attack key types of targets, and the ability to maintain a viable deterrent when challenged by an unexpected change in the nuclear threat.

Those measures may become less important in the future, particularly if the Cold War emphasis on destroying an opponent's nuclear forces and leadership gives way to a more basic deterrent--the threat of societal destruction. Yet all of those measures will continue to be of some concern during the current transition period. Some--such as the ability to maintain a credible deterrent in the face of unexpected increases in the nuclear threat--may assume more importance than in the past as the United States makes the transition to smaller forces and reduces its capacity for producing nuclear weapons and delivery systems.

Reducing the degree of modernization in the SLBM force by canceling the backfit would not alter many of the traditional measures of U.S. nuclear capability. The force would still have the same number of submarines and missiles, and it would still be able to deploy 1,728 nuclear warheads, the same number as under the base-case plan and close to the START II limit of 1,750 warheads (see Table 7 on page 25). This option would also maintain the same number of warheads at sea as under the base-case plan. Judging by those traditional measures, capability would not change.

Canceling the backfit would, however, have a number of effects on some of the other measures of SLBM capability, notably range and the ability to destroy some types of targets. Those changes may be acceptable in the post-Cold War environment; in any event, they would not degrade the force's capabilities below the level that exists today. In that sense, Option I limits the planned improvements to the Trident force but does not reduce the force's strength below current levels.

Reduced Range. Because the C4 missile is smaller than the D5, it must either carry a smaller payload than the larger missile or, if it is deployed with an equivalent payload, attack targets at shorter range. Canceling the backfit, and thereby keeping more C4 and fewer D5 missiles in the force, would--for a given payload--reduce the range from which a portion of the fleet could attack targets.[1]

A reduction in range could have important effects on capability. A shorter range cuts down the area in which a submarine can operate while on patrol, which could reduce its ability to avoid an attack by enemy antisubmarine forces. Reductions in range can also add to transit time, meaning that fewer submarines would be in their patrol areas, ready to fire their missiles during peacetime.

Yet compared with the base-case plan, this option would have at most a modest effect on the range capability of the SLBM force. For the 10 D5-equipped submarines that are retained in this option, ranges would be unaffected relative to the base-case plan. For the missiles on the eight C4 submarines (about 45 percent of the force), ranges would be about 15 percent shorter than the ranges of the D5 mis-

1. Range and payload are somewhat interchangeable. A missile has a certain amount of energy that it uses to carry its payload over some range. Because the amount of energy in the missile is fixed, the heavier the payload, the shorter the missile's range. The D5 is 80 percent larger than the C4; as a result, it has much more available energy and can carry a larger payload farther.

siles that would be deployed in their place by the base-case plan under the START II treaty. And because four warheads would be carried by each missile under the treaty, ranges for those C4 missiles would remain roughly 50 percent greater than the levels that had been planned for the C4 and D5 missiles during the Cold War, when each missile was expected to carry eight or more warheads.[2]

Thus, the survivability of the Trident submarines would not be measurably affected because the longer ranges Option I affords--relative to those that had been anticipated under Cold War plans--would significantly increase the expanses of ocean that U.S. ballistic-missile submarines could patrol and still be within range of their targets. (By one estimate, patrol areas could be roughly 100 percent to 400 percent larger, depending on the intended targets and the coast on which the submarines are based.[3]) Furthermore, if current trends in Russia's submarine-building programs continue, those increases in the size of patrol areas would occur at the same time that the antisubmarine threat is likely to diminish. Similarly, transit distances could be reduced to almost zero from the roughly 1,000 nautical miles that had been anticipated under Cold War plans.

Reduced Ability to Destroy Some Hard Targets. A certain degree of loss in the ability to destroy some targets that have been hardened to resist the effects of nuclear weapons may be a more compelling argument against canceling the backfit than one related to range. Hard-target capability is a function of the power of the warhead and, in particular, the accuracy of the missile. A C4 missile is less accurate than a D5 missile, and canceling the backfit means retaining more of the C4 missiles in the fleet. Hard-target capability, therefore, would be reduced.

Table 8.
Rating the Resistance of Targets to the Effects of Nuclear Weapons (Hardness)

Hardness Rating	Hardness (Pounds per square inch)[a]	Types of Targets
Soft	0-50	Vehicles, buildings, people, air bases, ports, ground forces, industry
Moderately Hard	50-1,000	Munitions bunkers, leadership bunkers, command and control centers, older Russian ICBM silos
Hard	1,000-3,000	Minuteman ICBM silos
Very Hard	More than 3,000	Newer Soviet ICBM silos, deeply buried leadership bunkers

SOURCE: Congressional Budget Office, *Trident II Missiles: Capability, Costs, and Alternatives* (July 1986), p. 6.

NOTE: ICBM = intercontinental ballistic missile.

a. The probability that a target will survive a blast depends on the duration of the period of high overpressures as well as on the peak overpressure.

Yet canceling the backfit would not have any significant effect on the ability of the SLBM force to attack most types of targets. It would have no effect on capability until 2003, when the first backfitted submarine is scheduled to reenter the fleet. Furthermore, this option would deploy an SLBM force that was more capable of destroying hard targets than the force that exists today.

Targets can be categorized into four groups--soft, moderately hard, hard, and very hard--based on the amount of excess air pressure, or overpressure, required to destroy them (see Table 8). Soft targets are defined here as those that can be destroyed by peak

2. These data are taken from John R. Harvey and Stefan Michalowski, *Nuclear Weapons Safety and Trident: Issues and Options* (Stanford, Calif.: Stanford University Center for International Security and Arms Control, forthcoming). The range comparisons assume that all D5 missiles in the Cold War plans would have carried eight heavy W-88 warheads and that C4 missiles currently carry eight lighter W-76 warheads. Estimates of the changes in range under other options elsewhere in this study are also based on the Harvey-Michalowski analysis.

3. See Harvey and Michalowski, *Nuclear Weapons Safety and Trident*, Section IV, for a discussion of the effects of throwweight changes on the patrol areas and transit times of U.S. ballistic-missile submarines.

overpressures of between 0 and 50 pounds per square inch (psi). Moderately hard targets require 50 to 1,000 psi; hard targets, 1,000 to 3,000 psi; and very hard targets, more than 3,000 psi. The so-called soft targets include people, vehicles, air bases, ports, ground forces, buildings, and industrial and economic infrastructure. Moderately hard targets include munitions bunkers, command and control centers, many leadership bunkers, and older Russian ICBM silos. Hard and very hard targets include modern missile silos and leadership bunkers that are buried deep underground.

The ability to destroy these targets depends on the accuracy of the missile and the size of the warhead. The Trident force has three combinations of warheads and missiles: the C4 missile with small warheads, the D5 with small warheads, and the D5 with large warheads. Each combination can destroy certain categories of targets. (See Table 9 for those categories and a comparison of the C4 and D5 missiles with other U.S. submarine-launched and land-based ballistic missiles.)

Canceling the backfit would not affect the ability of the SLBM force to attack soft targets--those can be destroyed with any combination of missiles and warheads. Nor would the cancellation affect the ability to destroy hard and very hard targets. Because the Department of Energy produced so few large W-88 warheads before it shut down the Rocky Flats plutonium production facility (see Chapter 2), all 400 existing W-88 warheads could be deployed even under the most far-reaching limitations on D5 deployment considered in this study.

Table 9.
Capability of Current U.S. Ballistic Missiles to Destroy Hardened Targets

		Target Categories			
Missile	Warhead	Soft (0-50 psi)	Moderately Hard (50-1,000 psi)	Hard (1,000-3,000 psi)	Very Hard (3,000-10,000 psi)
		Submarine-Launched Ballistic Missiles			
Trident D5	W-88	x	x	x	x
Trident D5	W-76	x	x		
Trident C4	W-76	x			
Poseidon C3	W-68	x			
		Intercontinental Ballistic Missiles			
MX	W-87	x	x	x	x
Minuteman III	W-78	x	x	x	
Minuteman III	W-62	x	x		
Minuteman II	W-56	x			

SOURCE: Congressional Budget Office, *Trident II Missiles: Capability, Costs, and Alternatives* (July 1986), p. 10.

NOTES: Capability is measured here by single-shot kill probability (SSKP)--the probability that an arriving warhead will destroy a target of a given hardness. (Hardened targets are targets that have been made to withstand to some degree the effects of nuclear weapons.) Missiles capable of destroying very hard, hard, and moderately hard targets have SSKPs of 70 percent against targets hardened to withstand 5,000 pounds of air pressure per square inch (psi), 2,000 psi, and 500 psi, respectively. All other missiles are capable only of destroying soft targets.

In the category of moderately hard targets, however, canceling the backfit would reduce the capability of the SLBM force. With 192 fewer D5 missiles and 192 more C4 missiles than under the base-case plan after the backfit is complete in 2010, the SLBM force in this option could attack 45 percent fewer moderately hard targets (munitions bunkers, leadership bunkers, command and control centers, and older Russian ICBM silos), assuming that only two-thirds of the fleet is at sea and able to launch its missiles (see Figure 4). That reduction translates into 500 fewer targets if the United States were to allocate one warhead to each target or 250 fewer if it allocated two warheads to each target.

Canceling the backfit would not produce any effect on capability before 2003, when the first backfitted submarine enters the fleet. Moreover, in spite of the reduced capability, U.S. nuclear forces may have ample remaining ability to destroy moderately hard targets. Under this option, the SLBM force alone would be able to attack some 650 moderately hard targets (or half that number if the United States allocated two warheads to each target), a slightly greater capability than exists today (see Figure 4). Land-based missiles such as the Minuteman III would add to this capability, as would nuclear weapons delivered by bombers. Even if Russia were to be perceived once again as hostile, this capability would still be substantial, particularly in light of treaties such as START II, which will force Russia to retire many of those nuclear forces that constitute moderately hard targets.

Nor is it clear whether the United States still needs a substantial capability to attack hardened or counterforce targets. For example, the number of hardened Russian targets will diminish significantly by 2003 when START II is fully implemented. In addition, some analysts argue that it is the threat of societal destruction, not the fear of losing some missiles in silos or bunkers, that deters nuclear attack (see Chapter 1 for a brief discussion of theories of nuclear deterrence). They therefore view the entire counterforce mission as suspect as long as there are forces such as submarines, mobile missiles, and bombers on peacetime alert that can survive a nuclear attack and deliver their warheads.

Figure 4.
Effect of Canceling the Backfit on the Ability of the SLBM Force to Destroy Targets

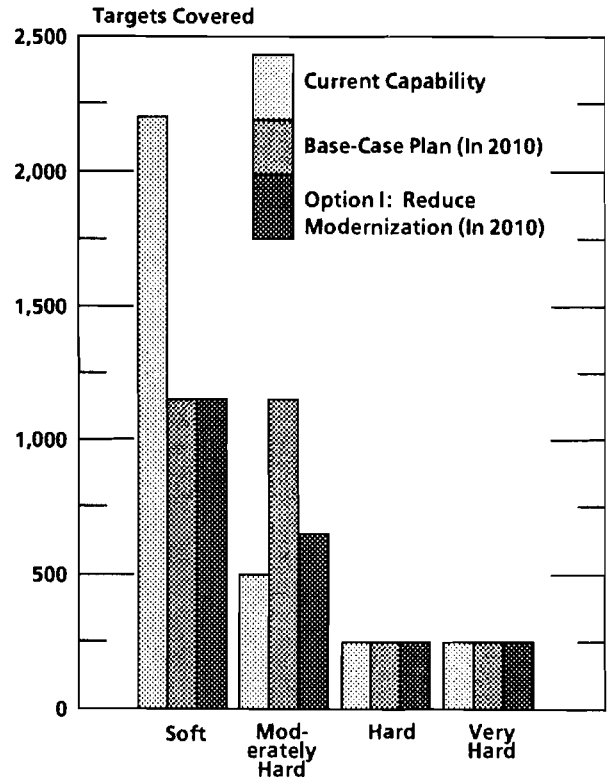

SOURCE: Congressional Budget Office.

NOTES: The figure assumes that two-thirds of the force is at sea and survives to launch its missiles and that, on average, one warhead is allocated to each target. That allocation probably overestimates the number of hard and very hard targets that would be covered: two warheads are typically allocated to those targets to increase the likelihood that they would be destroyed. Conversely, the allocation probably understates the number of soft targets that would be covered: a single warhead can destroy more than one target if the targets are close together, which is common in urban-industrial areas.

How Does Option I Affect Costs?

At first glance, canceling the backfit seems a promising way to save money, particularly in view of its relatively modest effects on capability. Cancellation would, after all, mean that

the Navy would purchase 200 fewer D5 missiles at an average savings of roughly $30 million apiece--the average unit cost of a D5 missile. That reduction, coupled with $2.6 billion in savings from ending plans to modify the eight older Trident submarines to carry D5 missiles, would generate total savings of about $8.5 billion between 1994 and 2010. (All costs and savings throughout this study are expressed in 1994 dollars of budget authority.)

According to Navy estimates, however, those savings would be offset to a large extent by the added cost of keeping the C4 missile force in the fleet at least through 2016. The net savings associated with canceling the backfit program would therefore total only about $500 million from 1994 through 2010 (see Table 10). Under the assumptions used in this study about the rate at which D5 missiles are produced, those savings would begin in

Table 10.
Potential Savings from the Options for the SLBM Force, Relative to the Base-Case Plan (In billions of 1994 dollars of budget authority)

								Total, 1994-2010	
	1994	1995	1996	1997	1998	1999	Total, 1994-1999	Replace Submarines After 40 Years	Replace Submarines After 30 Years
Cost of Base-Case Plan[a]	2.7	2.8	2.7	2.7	3.2	3.3	17.4	46.6	62.2
Savings from Options That Continue D5 Missile Procurement Through 1999									
I. Reduce Modernization (Cancel Backfit)[b]	0	0	0	0.2	0.6	0.6	1.3	0.5	0.5
II. Reduce Fleet Size	0	0	0.2	0.4	0.8	1.0	2.3	13.0	28.6
III. Reduce Fleet Size Moderately	0	0	0	0	0	0	0	4.3	11.1
Savings from Options That End D5 Missile Procurement Quickly									
IV. Reduce Modernization and Tubes per Submarine	0.5	1.0	0.7	0.7	1.0	1.0	4.9	4.3	4.3
V. Reduce Fleet Size, Tubes per Submarine, and Flight-Test Program	1.1	1.0	0.9	0.9	1.3	1.4	6.6	16.7	32.3

SOURCE: Congressional Budget Office derived from Department of Defense data.

NOTE: SLBM = submarine-launched ballistic missile.

a. Because the Clinton Administration has not released its long-term plan for the SLBM force, the Congressional Budget Office has defined a base-case plan to provide a benchmark for assessing the effects of the options it examines.

b. The backfit is the process by which the Navy would modify its C4-equipped Trident submarines to carry D5 missiles.

1997 and would total $1.3 billion through 1999. Beyond 1999, however, almost two-thirds of those early savings would be offset by the costs of refurbishing the C4 missiles.

This option might also result in higher costs beyond 2010 compared with those under the base-case plan. Because D5 missiles would be younger and because the Navy expects them to last for 25 years, a force composed exclusively of D5s should last longer than a force that includes C4s. If the backfit is canceled and the C4s are kept in the fleet, the United States might find it necessary to produce new missiles (either a new run of D5 missiles or a new missile) sooner than would otherwise be the case.

The key budgetary issue, though, is the cost of refurbishing the C4 missiles and extending the life of the entire C4 weapon system, and there is controversy about that cost. By some measures, the Navy's estimates seem high. Furthermore, a recent study suggested that the life-extension program for the system does not need to include replacing the rocket motors on the C4s, a change that would reduce the Navy's estimates of costs by $4 billion.[4] Because the costs of keeping the C4 weapon system in the fleet beyond 2008 are controversial, the remainder of this section discusses them in more detail.

Why Does It Cost So Much to Keep the C4 in the Fleet? The C4 missile was designed to last at least 10 years. Under the base-case plan, the last C4 missiles would retire in 2008 when the last C4-equipped submarine goes into the shipyard to be backfitted. By then, the youngest missiles would be 22 years old.

If the Navy canceled the backfit, some C4 missiles would have to remain in the fleet for at least eight more years (until 2016) when the youngest missiles would be 30 years old. Keeping the C4s in service that long would, according to the Navy, require taking significant steps to extend their service life.[5] The military has conducted programs to extend the service life of missiles before. For example, the Air Force is planning to conduct its second major life-extension program on the Minuteman III missile, which was deployed in December 1970. That program will allow the missiles to function reliably for the next 20 years or so. Another example is the A3 missile--an SLBM first deployed in 1964 and refurbished by the United States for the United Kingdom in the mid-1980s. The United Kingdom plans to keep these missiles in the fleet until its new Trident submarines become fully operational sometime after 1995.

The Navy would also have to take steps to extend the service life of the associated C4 weapon system hardware and support equipment. In addition, keeping the C4s in the fleet would increase support costs because the Navy would have to maintain training and maintenance facilities and flight-test programs for two different types of missiles.

The Navy estimates that the total cost of the C4 life-extension program would be $8.0 billion (see Table 11). That total can be broken down as follows: $4.0 billion for remanufacture of all three rocket motors on each of 360 C4 missiles; $0.2 billion for flight-test hardware to be used on the missiles during the extended testing program; $0.4 billion for new test equipment; $1.3 billion for weapon system hardware deployed on the submarines and at the training facility ashore; and $2.1 billion for support of a second missile type and its associated systems beyond 2008.

How Do These Costs Compare with Those of Other Programs? These costs appear high

4. See Steven J. Flint and Richard Unkle, "Trident C-4 Missile Life Extension Study" (Reliability Analysis Center/IIT Research Institute, Rome, N.Y., September 30, 1992). The Navy disputes some of the findings in this report.

5. Although missiles remain stationary in their tubes, over time the chemicals in the rocket propellants and in the insulator between the propellant and the rocket motor case undergo changes that can reduce the reliability of the missiles. The Navy estimates that as a result of those effects, the motors on those missiles will become unreliable after about 20 years and will have to be replaced.

when compared with the Air Force's estimates of the cost of the service life extension program that it plans to conduct for its Minuteman III missiles. That program will cost about $2.1 billion to remanufacture all three motors on each of 620 missiles, or about $3 million for each missile. By contrast, the Navy plans to spend $1.9 billion more to remanufacture 260 fewer C4 missiles, resulting in a cost of $11 million per missile.

Several factors might explain the higher costs for the Navy program. First, the Navy must remanufacture the Kevlar motor casings for all three stages of the C4 missile, which involves rebuilding a production line that has been disassembled for almost 10 years. In contrast, the Air Force can reuse the metal cases for the first two stages of the Minuteman III and need only remanufacture the casings for the smaller third-stage motor.

Second, the C4 program would involve propellants that are more difficult and costlier to handle than those in the Minuteman III missile. Like other SLBMs, the C4 missile uses a highly energetic propellant--called a 1.1 class propellant--to maximize the range of the missile within the constraints imposed by the volume of the missile tube. Compared with the less energetic 1.3 class propellants in the Minuteman III, the C4 propellants can detonate more easily if they are improperly handled.

The costs of the C4 remotoring program are also higher than those of the program to remotor the A3 missiles, which the United States refurbished for the United Kingdom. In many ways, the A3 is similar to the C4: both use 1.1 class propellants, and neither can reuse the motor casings. Yet remanufacturing 74 A3 missiles cost roughly $600 million, or $8 million each--only two-thirds the cost of the C4 program. The Navy cites the need to rebuild an atrophied base of suppliers and the constraints of strict new environmental regulations (which require some materials and manufacturing processes to be changed) as the primary reasons for the higher estimated cost of the C4 program.

Could Fewer C4 Missiles Be Remotored? The Navy has included 360 missiles in its cost estimates for remanufacturing the C4 motors but expects that it will use between 320 and 360 missiles, depending on the number of years that the C4 missiles will remain in service. If the Navy were to remotor 360 missiles,

Table 11.
Costs to Complete the Backfit of the C4 Trident Submarines and Extend the Life of the C4 Weapon System (In billions of 1994 dollars of budget authority)

	1994	1995	1996	1997	1998	1999	Total, 1994-1999	Total, 1994-2010
Perform Backfit[a]	0	0	0.2	0.4	0.8	1.0	2.3	8.5
Extend the Life of the C4 Weapon System Beyond the Backfit Period (2008-2010)	0	0	0.2	0.2	0.2	0.4	1.0	8.0
Savings from Canceling the Backfit	0	0	0	0.2	0.6	0.6	1.3	0.5

SOURCE: Congressional Budget Office (CBO) derived from U.S. Navy data.

NOTE: The data provided to CBO by the Navy on extending the life of the C4 weapon system beyond 2008 indicated funding in 1994 and 1995 totaling $400 million. Since that time, the Navy has announced that it will wait until 1996 before deciding whether to complete the backfit or keep the C4 in service beyond 2008. Accordingly, CBO has assumed that all funding for either alternative will be spent in 1996 and beyond and that the $400 million will be spent before 2000.

a. The backfit is the process by which the Navy would modify its C4-equipped Trident submarines to carry D5 missiles. The last C4 missiles would be retired in 2016 when the eighth C4 Trident submarine is retired (assuming a 30-year submarine service life).

CBO estimates that the Navy could retain the C4 missile through 2026, long enough to support the C4-equipped Trident submarines if they remained in service for 40 years. (This estimate assumes that the Navy makes no changes to the flight-test program that it currently plans.) The 360 missiles would include 192 that could be deployed on submarines and 168 for tests, of which 10 would be used in research and development and 28 in operational testing, according to the Navy. That would leave 130 missiles for follow-on tests, which the Navy plans to conduct at the rate of six a year.

If the Navy only requires roughly 320 missiles, a number that CBO's inventory model estimates would support the C4 missile through 2016 (long enough to keep the C4-equipped submarines in the fleet for 30 years), it could reduce the costs of extending the service life of the C4 by as much as $400 million. Accordingly, that reduction would increase the savings from canceling the backfit to $900 million from the $500 million reported in Table 10 (see page 30). Although buying 40 fewer missiles would almost double the savings from Option I, those savings would still be small--indeed, the smallest of the five CBO options--and the basic result of this option would remain unchanged: canceling the backfit would not generate large savings.

Must the C4 Missiles Be Remotored at All? The cost of maintaining C4 missiles in the inventory would be considerably smaller if the Navy did not have to replace their rocket motors. A recent study has suggested that C4 missiles could be kept in service until 2016 (roughly eight more years than the Navy now plans) without replacing the motors.[6] Conducted for the Department of Defense, the study argues that the missile motors should be reliable through 2016 without remanufacturing them. Eliminating that part of the program to extend the life of the C4 weapon system would reduce the cost of keeping C4 missiles in the fleet by $4 billion--and increase savings under Option I by a like amount. (Although the study argued against remanufacturing the motors, it supported the Navy's plan to spend some of the remaining $4 billion to extend the life of the weapon system hardware.)

That study is controversial, however, and the Navy disagrees with its conclusion that the motors do not have to be replaced. The Navy argues that projections of the service lives of ballistic missiles cannot be made with great confidence 20 years into the future. The service further contends that until future data prove otherwise, the remotoring program should be pursued because it would eliminate the risk that the C4 motors could become unreliable or unsafe and force the United States to deploy a ballistic-missile submarine force that would be smaller than planned. The Department of Defense is still reviewing the matter; resolving the technical issues involved is beyond the scope of this study.

To illustrate the effects on costs, this analysis considers an alternative that cancels the backfit and keeps the C4 missiles in the fleet without remotoring them. With this approach, canceling the backfit would save $4.5 billion through 2010. And the missiles could still serve as a deterrent--even though their motors might be less reliable--as long as an opponent was unable to assume that their reliability was near zero and as long as the missiles did not pose an unacceptable safety risk to the Trident submarines and their crews.

If the missiles became too unreliable or unsafe, the United States could retire the C4 submarines early and deploy a fleet with 10 D5-equipped Trident submarines with up to seven warheads carried on each missile (see Option II below for a discussion of that force). With the first C4 submarines retiring in 2011 under current plans and new replacement submarines scheduled to enter service then, deploying a 10-submarine fleet would be a temporary measure; the size of the fleet would increase rapidly as the new submarines began to enter it. Or the United States could start an

6. See Flint and Unkle, "Trident C-4 Missile Life Extension Study."

emergency remotoring program if national security reasons dictated such a course.

If the United States decided to keep the C4s in the fleet without remotoring them, it would have to accept the risk that the missiles might become unreliable or even unusable before the last ones were retired in 2016. But that approach might be undesirable because it could preclude the option of extending the service life of the Trident submarines from 30 to 40 years for those submarines equipped with C4 missiles. The Navy hopes that such a life extension is possible so that it can delay buying new submarines. But that delay would require keeping some C4 missiles in the fleet through 2026 without new motors--a course that may not be practical. For all of those reasons, this study uses the official Navy estimates of the cost of extending the service life of the C4 missile system but notes the cost advantages associated with not remanufacturing the C4 motors.

In sum, canceling the backfit offers the promise of substantial net savings only if the C4 missiles do not need to be remotored. Other approaches offer savings that do not depend on estimates of the service life of the missile.

Option II: Reduce Fleet Size

If the backfit is canceled, it may make more sense to reduce the size of the fleet by retiring the older C4 submarines early than to pay the high cost of extending the life of the C4 missile force. By 2008, this option would result in a total Trident force of 10 submarines, all carrying the modern D5 missile. The reduction in the fleet's size would not measurably affect the total number of warheads in the SLBM force or the number of survivable warheads that the United States deploys--and it could save substantial amounts of money. This option would also provide some insurance against a change in the nuclear threat over the next few years because it would keep all 18 Trident submarines in the fleet until early in the next decade, by which time the remaining threats to U.S. security may be clearer.

What Specific Changes Would Be Made?

Like Option I, Option II would cancel the backfit program, thereby reducing by 200 the number of D5 missiles that would have to be purchased relative to the base-case plan. Also like Option I, this option would require a total of 428 D5 missiles, of which 133 must still be purchased. But instead of extending the life of the C4 missile, this option calls for retiring the eight oldest Trident submarines that are equipped with C4 missiles sometime just before their refueling overhauls during the middle of the next decade.[7] (The timing of the refueling overhauls corresponds to the point at which the Navy estimates that the C4 missile force will no longer be sustainable without an expensive life-extension program.)

Under this option, the SLBM force would be identical in size and capability to the currently planned force until 2001 when the refueling overhauls are scheduled to begin, whereupon the size of the fleet would begin to shrink gradually. From 2008 until the Trident submarine fleet was replaced, the United States would retain a force of 10 Trident submarines, all of which would carry D5 missiles (see Table 7 on page 25). To maintain the number of SLBM warheads near the limit specified in the START II treaty, each missile would carry 7 warheads compared with the 4 warheads assumed under the base-case plan. Accordingly, the total number of SLBM warheads would stand at 1,680 under this option.

7. In principle, the submarines could be mothballed rather than retired to provide insurance against a changing international environment. The Navy is uneasy about this idea, however, because it has no previous experience with mothballing nuclear-powered ships or submarines and thus no basis for guaranteeing the safety and viability of the submarines if they are brought back to active status.

What Are the Effects on Capability?

This option would not affect many of the basic capabilities of the SLBM force. Although eventually there would be fewer submarines, the total number of SLBM warheads would be maintained near the level allowed by the START II treaty by increasing the number of warheads on each missile. The number of warheads deployed at sea would also be virtually unchanged from the level envisioned in the base-case plan. (In essence, this approach takes the same number of warheads and deploys them on fewer submarines.) Moreover, the capability of the force to destroy hardened targets should be the same as under the base-case plan because all of the missiles in the fleet would be D5s after the C4 submarines had been retired.

The changes associated with this option would, however, adversely affect some measures of capability--for example, the range of the missiles, the vulnerability of the fleet, and the ability of the force to cover widely distributed targets. The smaller fleet would also give the United States less flexibility in increasing the number of SLBM warheads--if such an action were required to respond to unexpected increases in threats to U.S. security.

Range. Because the D5 missiles under this option would carry three more warheads than the missiles under the base-case plan, their range would be reduced--by 15 percent to 30 percent--relative to the base-case plan under START II.[8] (The military implications of decreased range for target coverage and operating areas were discussed on pages 26 and 27.) Yet despite the reduction, this option would still deploy missiles with ranges 10 percent to 50 percent longer than the ranges of missiles in today's fleet, depending on the type of warhead the missile carried. The ranges under this option would also be 10 percent to 50 percent longer than those considered acceptable during the Cold War, when D5 missiles were intended to carry eight W-88 warheads.

The range of an SLBM directly affects the size of the ocean areas that a ballistic-missile submarine can patrol and still be within striking distance of its targets. Larger areas, in turn, will increase the survivability of the submarines by increasing the expanse of ocean that an enemy must search. Although Option II would reduce the size of the patrol areas relative to the base-case plan, it would still allow three-quarters of the fleet (the portion that would carry W-76 warheads) to patrol in areas at least twice as large as those specified under Cold War plans, when the threat from enemy antisubmarine forces was greater. In addition, this option would increase patrol areas by 20 percent to 40 percent, relative to Cold War plans, for the one-quarter of the fleet that would carry W-88 warheads.

Safety Improvements and New Warhead Designs. The SLBM force could face additional reductions in range if the United States decided to incorporate certain safety improvements. In a December 1990 report to the Congress on the safety of the nuclear arsenal, a commission headed by Stanford physicist Sydney Drell stated that although the United States had compiled a good safety record with its nuclear arsenal, "there is still room for substantial improvement" in some systems--including the Trident C4 and D5 missiles and the W-76 and W-88 warheads.[9] The improvements in safety that might be incorporated into the warheads could make them heavier, which in turn could reduce the missiles' range. In addition, improving the safety of the missiles themselves could also reduce their range. (See Appendix C for a more detailed discussion of safety issues.)

Some weapons designers have suggested that the United States develop new warheads that would operate reliably for years without

8. See Harvey and Michalowski, *Nuclear Weapons Safety and Trident*, Section IV.

9. House Committee on Armed Services, *Nuclear Weapons Safety*, Committee Print 15, 101st Cong., 2nd Sess. (December 1990).

underground testing. Such a warhead is likely to be either heavier or larger than current warheads and could reduce the range of any missile on which it is mounted. Its advantage is that it would permit the United States to live within the constraints of an indefinite ban on nuclear testing while retaining confidence in the reliability of its nuclear weapons.

The range penalties associated with safety improvements and more robust warheads are of no particular concern in themselves, although they could become troubling in combination with the reductions in range imposed under this option. Even with the reductions, however, the resulting ranges could well be similar to those of the Cold War years--depending on the safety improvements made to the missiles and warheads--when missiles were expected to carry eight or more warheads.

Moreover, it is not clear whether any of the safety improvements or new warhead designs will be implemented, especially if the United States continues to operate under the constraints of the Hatfield amendment to the Energy and Water Development Appropriations Act for fiscal year 1993. That amendment limits the United States to conducting no more than 18 underground tests of nuclear weapons through 1996 and imposes a unilateral moratorium on underground testing thereafter--unless another country conducts a test first. Without tests, it may be difficult to design new warheads or make changes to existing ones.

Targeting Flexibility. This option might constrain somewhat the ability of the SLBM force to attack widely dispersed targets. The base-case plan calls for 432 missiles, each carrying 4 warheads, to be deployed on the Trident submarines. In contrast, this option would deploy 240 missiles carrying 7 warheads each. The total number of warheads is nearly the same in either case (1,728 for the base-case plan versus 1,680 for this option). However, because each missile can distribute its warheads over a limited area several hundred miles wide (called the footprint), the larger number of missiles under the base-case plan would permit targets distributed over a wide area to be attacked more efficiently.

How significant is this loss of flexibility? From the perspective of a nuclear targeter, the most appropriate goal may be to maximize the SLBM force's ability to cover targets scattered over the expanse of a large enemy such as a remilitarized Russia. To the extent that START II will eliminate many ICBM silos and command centers while reducing the number of available U.S. warheads, enhancing flexibility by deploying 4 warheads per missile could make sense. It is not clear, however, whether a potential opponent would feel less deterred if the United States placed its approximately 1,700 SLBM warheads on 240 rather than 432 missiles.

Vulnerability of Submarines at Sea. The smaller number of submarines under this option could increase the vulnerability of the Trident fleet to attack by enemy antisubmarine forces. In the past, the United States has kept a large number of submarines deployed at sea to increase the survivability of the entire fleet. That policy will continue indefinitely under the base-case plan. The practice has been driven by the Navy's concern that Soviet attack submarines operating off the coasts of the United States or in areas in which U.S. submarines patrol could detect the U.S. ships, trail them and, in the event of a nuclear war, destroy them before they could launch their missiles. This option would place more warheads on each submarine, thereby amplifying the effects if one or more were destroyed. That possibility might be unacceptable, given that under START II, the United States' peacetime deterrent will rely more heavily on its submarines than ever before.

Another concern of military planners is that Russia could achieve a technological breakthrough that would make the oceans "transparent." Although far less likely than an incremental improvement in Russia's capability for antisubmarine warfare, the possibility of such a breakthrough cannot be dismissed. Still, if it were to occur, a smaller fleet size might not necessarily reduce the survivability

of the fleet because virtually all U.S. submarines could be vulnerable. In that case, the United States would have to rely on its bombers and ICBMs or change the way it operates its forces to ensure that it retains a sufficient number of survivable warheads to provide an adequate deterrent.

Yet many factors suggest that even a small fleet would be largely invulnerable. Antisubmarine forces seeking to detect and destroy Trident submarines face an immense challenge. U.S. submarines patrol the waters of the open ocean in broad areas limited only by the range of the SLBMs deployed on them: the longer the missile's range, the larger the area in which a submarine can hide and still be within range of its targets. In those patrol areas, U.S. submarines operate alone, in virtual silence relative to the background noise of the ocean, which makes them extremely difficult to detect. Indeed, Navy officials repeatedly assured the Congress during the Cold War that not one U.S. submarine had been detected while on patrol.

Moreover, world events have diminished the threats to U.S. submarines. Since the summer of 1990, when President Bush decided to stop Trident production at 18 ships, the navy of the former Soviet Union has significantly limited its antisubmarine activities. Although Russia continues to emphasize its submarines over its surface fleet, many of its attack submarines are kept in port because of a lack of money to maintain and man them. Russia has also reduced the number of ships it deploys outside neighboring waters. In addition, it is retiring many older attack submarines and has sharply reduced the number of submarines that it produces. Statements by U.S. officials indicate that Russia has not started building a new submarine since the end of 1991. Furthermore, other nations of the world pose little threat to the U.S. ballistic-missile submarine force.

In a Russia consumed by internal problems, there is not much reason to believe that these trends will be reversed anytime soon. Even if Russia were again to become militaristic, it could take several years for it to reconstitute its submarine forces, which would require training crews and building or renovating ships. Option II would not begin to retire the C4 submarines for almost another decade, and the production line for D5 missiles would remain open through 2000. Consequently, the United States would have a number of years to reverse this policy if the international situation were to deteriorate in a way that increased the risk of attack on ballistic-missile submarines. And even in the event of a technological breakthrough by Russia that created a new threat rapidly, the other legs of the triad (bombers and land-based missiles) would provide insurance.

Ability to Respond to Unexpected Threats. This option would also reduce the ability of the United States to expand the number of SLBM warheads rapidly in the event that the threat of nuclear war increased dramatically. Under the base-case plan, each D5 missile would carry four warheads but could be deployed with up to eight warheads relatively quickly, should security conditions deteriorate. Under this option, each D5 would carry seven warheads, which offers little room for extra warheads to be added.

The need for flexibility, though important, may not be a compelling reason to avoid reducing the size of the Trident fleet. First, the probability that the United States will need to expand its nuclear forces rapidly seems low. The superpowers do not seem likely to return to deploying vast conventional forces opposing each other across a line in Europe--the type of hair-trigger confrontation in which a crisis could rapidly escalate into nuclear war. If U.S. nuclear expansion did become necessary, for whatever reason, the number of warheads deployed on bombers and land-based missiles could be increased and the alert rates of the bombers heightened.

Finally, even without expanding its forces, the United States under this option would continue to deploy a large number of warheads on a triad of submarines, bombers, and land-based missiles. Those forces would be capable

of delivering a counterattack devastating enough to give any potential aggressor pause.

How Does Option II Affect Costs?

The savings from this option would be substantial over the long term but modest over the next six years. Relative to the base-case plan, this option would save a total of between $13.0 billion and $28.6 billion from 1994 to 2010, depending on assumptions about how long the Trident submarines could remain in service. But it would generate no savings until 1996 and only $2.3 billion through 1999 (see Table 10 on page 30).

The United States would realize savings under this option by reducing the number of D5 missiles by 200, thereby halting D5 procurement after 1999. Option II would also avoid the cost of performing the backfit and the expense of extending the life of the C4 missile and weapon system. This approach would save money during the next decade as well because fewer Trident submarines would have to be maintained: there would be no need for the costly refueling overhaul--at roughly $200 million apiece--on the eight C4 Tridents, and additional savings would be realized beginning at the end of the next decade by not operating the eight retired submarines. (The cost to retire the submarines--about $50 million each--is included in the net savings from this option.)

These various changes would reduce costs by $13.0 billion (28 percent of the costs of the base-case plan) in the 1994-2010 period. That figure represents the estimated savings associated with Option II if the Navy is able to extend the service life of the Trident submarine to 40 years. In that case, all of the costs of buying replacement submarines would be incurred in the years beyond 2010 and consequently would not be affected by reducing fleet size under Option II.

Savings under this option would be sharply higher, relative to the base-case plan, from 1994 through 2010--totaling $28.6 billion, or 46 percent of the base-case costs--if the service life of the Trident submarines remains at 30 years, as current Navy plans assume. Savings would increase because the costs of the base-case plan would rise, not because Option II would cost less. That rise occurs under the 30-year assumption because the Navy would have to spend $15.6 billion to purchase replacement submarines through 2010 in order to maintain a fleet of 18 vessels. The costs of the 10-submarine force envisioned in Option II, however, remain the same--about $34 billion in the 1994-2010 period--because the Navy would not have to begin purchasing replacements until after 2010, whether the submarines remain in service for 30 or 40 years. That result reflects the particular assumptions of this option. Under other options and other time periods, the cost to buy and operate the fleet would vary under a 30- or 40-year retirement scenario.

This principle is perhaps best illustrated by life-cycle costs, which are defined as the total cost to buy and operate the SLBM force from launch to retirement. Under Option II, the life-cycle cost for a force of 10 submarines would average $2.8 billion a year if the submarines stay in service for 30 years but only $2.7 billion a year if they remain in service for 40 years.

In addition, life-cycle costs clearly illustrate the average annual savings from reducing the size of the fleet; they are always higher under the base-case plan because it assumes an SLBM force of 18 submarines. Those costs vary with assumptions about retirement--from $3.8 billion to $3.5 billion a year for a fleet with a 30-year or 40-year service life--but they remain from $800 million to $1 billion higher per year under the base-case plan than under Option II.

Life-cycle costs include many factors. They reflect the cost of developing and buying 10 or 18 Trident submarines, outfitting each of them with 24 D5 missiles, buying the missiles required for flight tests, operating the submarine fleet for 30 or 40 years, and maintaining

the readiness and reliability of the missiles and weapon system hardware.

Estimates of life-cycle and other long-run costs are always uncertain, though usually in ways that tend toward understatement. For the long-run costs of the base-case plan, the new submarines that would replace the Tridents are assumed to cost no more than the Trident. But the costs of a new generation of weapons are typically higher than the costs of the previous generation, sometimes by a great deal. For estimates of life-cycle costs, the same uncertainty applies to the cost of the missiles that would eventually replace the D5. In addition, some costs may have been excluded because information was not available for estimating them. For example, if the Trident submarines are retained in the fleet for 40 years rather than 30 years, there may be costs associated with extending their service lives, but those costs are not included in this study.

A variation of Option II would increase the total savings and realize them sooner by retiring the eight C4 submarines several years before their refueling overhauls. The total savings generated by this approach would be roughly $200 million greater for each year that the retirement of all eight submarines is accelerated. If those submarines are retired over the next few years, Option II could realize additional savings of $2.3 billion by avoiding the need to extend the life of the C4 force until the backfit begins.

Option III: Reduce Fleet Size Moderately

This option, a more moderate approach than Option II, would keep 14 submarines in the fleet, including 4 of the older C4 vessels. Those older ships would be backfitted with the D5 missile so that all ships in the fleet would be fully modernized. Option III is similar to one reportedly considered by a recent Navy study on long-term modernization of all its forces. This option would achieve some of the savings of the second option but would have more moderate effects on the capability of the force.

What Specific Changes Would Be Made?

Option III would backfit four of the C4-equipped Trident submarines and retire the remaining four. The resulting 14-submarine force would all carry D5 missiles. To stay near the START II limits, this option would deploy roughly five warheads per missile--one more than is called for in the base-case plan--for a total of 1,680 warheads, the same number that would be deployed in Option II (see Table 7 on page 25). To account for the four fewer D5-equipped submarines and the smaller number of DASO tests required, this option would procure D5 missiles through 2003, ending four years earlier than envisioned under the base-case plan.

What Are the Effects on Capability?

In many ways, this option would provide as capable a force as that deployed under the base-case plan. For example, the number of warheads would be close to the START II treaty limits. In addition, the force would have the same ability to destroy hardened targets because all of its warheads would be carried by the accurate, long-range D5 missile.

A smaller Trident force could, however, adversely affect several measures of the capability of the fleet, including its vulnerability to attack by enemy antisubmarine forces and its ability to respond to unexpected changes in the nuclear threat. Those adverse effects are discussed in connection with Option II. But with a fleet of 14 submarines, all of those effects would be less significant than they would be for the 10-submarine force in that option.

How Does Option III Affect Costs?

Although Option III would have less adverse effects on capability than Option II, it would also save less: $4.3 billion to $11.1 billion through 2010, compared with $13.0 billion to $28.6 billion under Option II (see Table 10 on page 30). Moreover, Option III would save nothing through 1999 compared with Option II's savings of $2.3 billion. This option would, however, save substantially more than Option I because it backfits only four submarines, avoids the expensive extension of the service life of the C4 missile, and maintains a smaller fleet.

This option also realizes savings because only 528 D5 missiles are purchased (100 fewer than under the base-case plan). In addition, Option III saves money by retiring four submarines early and thus avoids the costs of their refueling ($200 million per submarine) and operating (about $30 million per submarine per year). Together, those changes would reduce costs by $4.3 billion in the 1994-2010 period. That figure represents the estimated savings for Option III if Trident submarines remain in the fleet for 40 years.

If the submarines can remain in service for only 30 years, some replacement vessels would have to be purchased by 2010. Nevertheless, savings under this option would rise to $11.1 billion because the Navy would have to purchase fewer new submarines to support a force of 14 ships than it would under the base-case plan's 18-ship force.

A variation of this option that would generate similar savings would keep the fleet at 14 submarines, cancel the backfit altogether, and keep four C4 submarines in the fleet. In that case, the D5 program could be terminated at the end of 1999, as in Option I. The capabilities of the force would be similar to Option III's under this approach, but there would be a slight reduction in range and some degradation in the ability to destroy moderately hardened targets. Those changes in capability would be similar to, but less severe than, the changes that result from canceling the backfit in Option I.

Chapter Four

Options That Assume D5 Procurement Ends Quickly

Under all the options in the preceding chapter, D5 procurement continues at least through 1999. As a result, none of the options achieves substantial savings before 1998. To realize savings sooner, the United States could terminate D5 procurement earlier than 1999. The two options presented in this chapter terminate procurement at the end of either 1993 or 1994.

That early termination, however, would require far-reaching changes to the submarine-launched ballistic-missile force, especially if termination is to produce substantial savings. The options in this chapter begin with the approaches considered in Chapter 3: either reducing the degree of modernization of the force by canceling the backfit or reducing the size of the fleet to 10 submarines. In addition, both options assume that Trident submarines would be altered so that only half of their 24 missile tubes could be filled with missiles. Deactivating the tubes is a major policy change that would raise important issues regarding compliance with arms control agreements. The two options also would reduce the number of missiles for Demonstration and Shakedown Operations by roughly 30 percent.

A significant consideration for decision-makers is that terminating D5 procurement by the end of 1994 would disrupt the United Kingdom's D5 program. The British plan to procure D5 missiles through 1997 to equip their own Trident submarines; the program is one of their most important military procurement efforts. If the United States terminates its procurement of the missile by 1994, the British would have to buy their missiles a few years earlier and possibly pay a higher price. Curtailing production early, therefore, might raise an important diplomatic issue.

If the far-reaching changes associated with early termination of D5 procurement are judged to be too severe, the Navy could save money in the near term by diminishing the portion of the submarine fleet that it keeps at sea during peacetime--in other words, reducing the fleet's operating tempo. Appendix D discusses this issue in more detail.

Option IV: Reduce Modernization and Deactivate Tubes

In addition to reducing the degree of modernization by canceling the backfit, one approach to terminating D5 procurement rapidly would deactivate half of the missile tubes on each Trident submarine--a process sometimes called detubing. But the second Strategic Arms Reduction Talks Treaty does not recognize detubing as a means of complying with the limits the treaty sets on warheads. This option would therefore require an agreement with Russia about detubing if warhead levels in the U.S. SLBM force are to remain near the treaty limits.

"Detubing" is used here to mean deactivating some, but not all, of the missile tubes on a

nally, Option V assumes some relatively modest reductions in the planned flight-test program: follow-on flight tests would be reduced from six per year under the base-case plan to five per year, and, like Option IV, the DASO program would be reduced to 25 missiles from the 34 called for in the Navy's current policy.

With those changes, the Navy would have to buy only 295 D5 missiles and could end procurement after 1993 (see Table 7 on page 25).

What Are the Effects on Capability?

Some of the adverse effects on SLBM capability associated with this option have already been discussed in connection with previous options. The range of the D5 missiles would be reduced because they would carry eight warheads, and the smaller size of the Trident fleet could increase its vulnerability to enemy attack. In addition, the ability to expand the size of the SLBM force rapidly in the event of increased nuclear threats to U.S. security would be reduced (see the discussion of this effect in connection with Option II on page 37). Option V would also create more acute concerns about timing compared with Option IV because it would leave the United States less time to work out an agreement on detubing with Russia before ending D5 procurement.

Besides those effects, the reduced follow-on testing noted above would increase the time required to detect problems in the D5 inventory that arise from the aging of the missiles. The Navy uses the FCET (Follow-On Commander-in-Chief Evaluation Testing) program to detect and correct any age-related problems, such as cracks in the rocket motors or failures in electronic components, that could develop over time and reduce the reliability of the missile. The time required to detect such problems depends on the number of missiles affected and the frequency with which the missiles are tested. Trimming the annual rate of testing from six missiles to five, as this option assumes, would increase by about 20 percent the time required to find an emerging problem affecting the fleet. (Appendix A discusses in more detail the effects of changing the flight-test program.)

The most important effect of Option V, however, involves the number of warheads it would deploy rather than problems with aging or submarine vulnerability. This option would eventually deploy 10 Trident submarines, each with 12 missile tubes. Even if each missile carried 8 warheads, the total deployment would be limited to 960 warheads, about 55 percent of the total number of SLBM warheads allowed under the START II treaty. The number of warheads deployed at sea would be reduced by a similar percentage relative to the base-case plan. The reduction in deployed warheads below the levels of the base-case plan would not begin until 2000, but terminating D5 procurement at the end of 1993 would largely commit the United States to this approach. Option V, therefore, would reduce one of the basic capabilities of the SLBM force.

The United States could compensate for the reduction in warheads in the SLBM force and still remain within overall START II limits by making other changes to its nuclear forces. It could maintain the number of total warheads at the levels set out in the base-case plan under START II by increasing the number of weapons carried by bombers, the number of bombers equipped with nuclear weapons, or the number of Minuteman land-based missiles deployed in silos. The latter two actions, however, would increase the cost of those forces somewhat and could raise other important issues about the composition of U.S. nuclear forces. More important, the number of warheads on the most survivable leg of the triad would be reduced below the levels allowed by the START treaty. If the United States considers that reduction to be deleterious to its nuclear deterrent, it could compensate somewhat by returning a portion of the bomber force to a state of runway alert.

If the United States and Russia could not agree to allow detubing, the United States under Option V could deploy only 840 warheads

(12 missiles per submarine, each missile carrying 7 warheads) within the SLBM force. It could not compensate for the lost 120 warheads, however, because the SLBM force would be counted under the START II treaty as carrying its full load of 24 missiles and 1,680 warheads. The lost warheads would represent a unilateral reduction of 52 percent below the limit on SLBM warheads imposed by the treaty.

How Does Option V Affect Costs?

In return for this fundamental change in the SLBM force, Option V offers substantial savings. Relative to the base-case plan, the option would save $6.6 billion through 1999, including $1.1 billion in 1994 alone (see Table 10 on page 30). Through 2010, savings would total at least $16.7 billion, or about 35 percent of the cost of the base-case plan. Over the next few years, the most significant portion of those savings would come from reducing the procurement of D5 missiles. Only 295 D5 missiles would be required for this option, and those missiles are already in hand; as a result, procurement would be terminated after 1993. During the next decade, Option V would save money by avoiding the cost of the backfit and by maintaining fewer Trident submarines. There would, for example, be no need for the costly refueling overhaul--at roughly $200 million apiece--for the eight C4 Tridents.

If the Navy keeps the Trident submarines in the fleet for only 30 years, it must begin purchasing replacement vessels before 2010 to maintain a base-case fleet of 18 submarines. Consequently, the savings under Option V would rise to $32.3 billion (or 52 percent below the costs of the base-case plan) because reducing the size of the fleet to 10 submarines delays the need for replacements until after 2010. (See the discussion of Option II on page 38 for more details.)

A variation on this approach would increase the total savings and realize them sooner by retiring the eight C4 submarines in the mid-1990s rather than in the next decade. For each year that retirement of all eight submarines is accelerated, the United States would save an additional $200 million. It could realize additional savings of $2.3 billion by avoiding the need to extend the life of the C4 missiles until the end of this decade.

Option V, then, fundamentally alters the base-case plan for the SLBM force. The United States would not be able to deploy all of the SLBM warheads permitted under the START II treaty, although it could maintain the total number of deployed warheads at START II levels by increasing the number of warheads deployed in the bomber or ICBM forces. Such a reduction may be acceptable in the post-Cold War period, and if so, the budgetary savings would be substantial. Option V also illustrates the degree of change required in the Navy's plans for the SLBM force if D5 procurement is to be terminated after 1993 while also substantially reducing costs.

Chapter Five

Conclusion: Choosing Among the Options

This study has presented five alternatives to the base-case plan and analyzed their effects on costs and capability. Which approach strikes the best balance between those two factors? The answer depends on the reader's view of the appropriate balance between costs and the requirements of nuclear deterrence.

What Deters, and How Much Is Enough?

The paramount goal of U.S. strategic nuclear forces is to deter an attack on the United States. But what deters a nuclear war, and how much is enough? Analysts and military planners have struggled with those questions since the beginning of the nuclear age.

Deterrence is inherently a psychological matter. Success requires convincing a potential attacker--who has a set of values and a frame of reference that can never be known with certainty--that it has more to lose by attacking than it has to gain. What deters an attack may also depend on the scenario. For example, an attack that may seem foolhardy during peacetime could, in a crisis, become a palatable alternative.

As mentioned in Chapter 1, there are varying schools of thought about deterrence. At one end of the spectrum are those who believe that to deter a nuclear war, the United States must be able to threaten much of its opponent's capacity for fighting such a war and that opponent's leadership infrastructure.[1] That kind of capability requires a large U.S. arsenal. Others adhere to the doctrine of minimum deterrence. They believe that the United States need only be able to threaten the destruction of its enemy's cities and economic infrastructure in order to deter, a view similar to that espoused by the Navy in the early years of the ballistic-missile submarine program. Given the awesome power of nuclear weapons, societal destruction can be accomplished with a force as small as a few hundred warheads if they are deployed in a manner that would permit them to survive a surprise attack.

Attitudes about what is required to deter an enemy are changing with the end of the Cold War. Now that the chance of a major war in Europe has been eliminated, the two nuclear superpowers have taken a dramatic step back from the trip wire that many believed could have led to a nuclear war. The sizable cuts in forces envisioned in the second Strategic Arms Reduction Talks Treaty (from 10,000 to 3,500 deployed warheads by 2003) reflect that change.

Further changes are possible in the future. If the United States and Russia develop a stable, friendly relationship, the United States

1. See Chapter 2 of Congressional Budget Office, *The START Treaty and Beyond* (October 1991), for a discussion of theories of deterrence and nuclear targeting policies.

may need its forces only to deter other nations who have nuclear weapons. Leaving aside this country's European allies, those other nuclear nations are thought to possess stockpiles of long-range nuclear weapons that number in the tens of warheads rather than in the thousands. If deterring them becomes the key mission for U.S. nuclear forces, the requirements for those forces may decline sharply below the levels permitted by the START II treaty. Indeed, deterring regional powers from beginning a nuclear war may depend much more on the capability of U.S. conventional forces, U.S. political actions, and trends in world events rather than on the size of the U.S. nuclear arsenal.

Measuring Deterrence

For the next few years, Russia will continue to have a large stockpile of nuclear weapons at the same time that it undergoes great instability. The United States thus will want to maintain sufficient nuclear forces to deter Russia from attack in the event of a return to hostile relations.

Although it is impossible to know exactly what forces are needed for such deterrence, some broad measures have traditionally been used to gauge that ability. Included are the number of warheads, the ability of forces to survive a nuclear attack, and the flexibility of nuclear forces. The options in this study would affect those broad measures in different ways.

Number of Warheads

Under all of the options, the United States could keep the total number of warheads in its nuclear arsenal at the level anticipated in the base-case plan under the START II treaty: roughly 3,500 warheads. The first four options would retain about 1,750 warheads in the submarine-launched ballistic-missile force, which is the ceiling set by START II. Under the fifth option, 45 percent fewer warheads would be deployed in the SLBM force than are allowed by the START II treaty. But the total number of warheads in the U.S. arsenal could be maintained at the START II level by increasing the load carried on the bomber leg of the triad of U.S. strategic forces, although those warheads would be less likely to survive a first-strike attack by an enemy than warheads deployed on SLBMs.

Under the fourth and fifth options in the study, the total number of warheads in the U.S. arsenal could be reduced below the level permitted by START II if the United States and Russia do not agree to count detubing of nuclear submarines as a means of meeting the treaty's ceilings. Those reductions, however, would be relatively modest. START II permits each nuclear superpower to retain a total of 3,500 strategic warheads. If no agreement is reached on detubing, the United States could fall short of that level by 480 warheads under the fourth option and 120 warheads under the fifth option. Nevertheless, it would still retain a force that equals or exceeds the size of the force that Russia is expected to deploy under START II.

Ability to Survive

Counts of warheads provide a crude measure of deterrence, but estimates of the number of a nation's warheads that can survive an enemy's attack provide a more useful measure. Those forces are the ones that the United States would have available to retaliate and therefore the ones to which a potential attacker would be likely to pay the most attention.

Some of the options in the study, particularly those that cut the size of the submarine fleet, might reduce the number of SLBM warheads that are likely to survive a Russian attack. The SLBM force faces two principal threats: an attack on submarine bases, which submarines deployed at sea would be expected to survive, and an attack by antisubmarine forces on those at-sea submarines. All but the fifth option would deploy the same number of warheads at sea (more than 1,100) as the base-

case plan would deploy (provided detubing is allowed under Option IV).

Reducing the size of the fleet could also reduce the number of SLBM warheads that would survive an attack. During the Cold War, both nuclear superpowers had attack submarines and other military units that were dedicated to seeking out the other's ballistic-missile submarines and destroying them before they could launch their missiles. If Russian forces could destroy the same number of submarines regardless of the size of the U.S. fleet, it could cause greater damage to a smaller fleet because each submarine would be carrying more warheads. (That scenario assumes that the same number of warheads is deployed at sea in either case.) Consequently, if the fleet were smaller, fewer U.S. submarines might be likely to survive.

Even during the height of the Cold War, however, U.S. ballistic-missile submarines had a high probability of avoiding the Soviet forces that sought to destroy them. The U.S. deploys its submarines covertly and randomly over large areas of the world's oceans. Finding them is difficult at best, and trailing them long enough to destroy them is even more challenging. Indeed, during the Cold War, Navy officials often told the Congress that not a single U.S. ballistic-missile submarine had ever been detected while on patrol.

Moreover, since the end of the Cold War, Russia has kept many of its attack submarines in port, thereby reducing the threat to U.S. vessels. If hard-line leaders returned to power, Russia could renew its antisubmarine operations. But nuclear attack submarines are expensive to operate, and Russia has cut back on its production of such vessels. Therefore, it is unclear whether Russia could renew its antisubmarine operations quickly or deploy a force with the same level of capability as during the Cold War.

Flexibility of the Force

The options might have their most important effect on the flexibility of U.S. nuclear forces. That flexibility has several aspects, and each of the options would reduce them in some way.

For example, compared with capability under the base-case plan, those options that cancel the backfit program would lessen the ability of the SLBM force to destroy some types of targets that have been hardened to protect them against nuclear blasts. Under certain notions of deterrence, the ability to destroy hardened targets--for example, leadership bunkers--is important. The options that deploy more than four warheads on each missile would also limit somewhat the ability of the SLBM force to attack widely dispersed targets. Again, that capability would be considered important by those who believe that deterrence depends on the ability to destroy a wide variety of enemy targets.

What is probably the most important aspect of flexibility during the current transition period--the ability of U.S. forces to respond in the face of an unexpected increase in the nuclear threat--would also be affected by certain of the options. The options that deploy more than four warheads per missile either reduce the size of the fleet or the number of missiles per submarine. Those constraints limit the ability of the United States to increase the size of its SLBM force rapidly if Russia were someday to remilitarize and become hostile.

Even if the number of SLBM warheads could not be increased quickly, however, the United States could still achieve a rapid increase (over a period of a few months) in the number of warheads deployed in its total arsenal by installing additional warheads on bombers or on those land-based missiles that can carry extra warheads. (There are practical limits, of course, to the number of warheads that the United States could deploy on those forces.) The United States could also increase the survivability of its force quickly by returning its bombers to a high state of alert during peacetime.

Nor is it clear, even in the face of a remilitarized Russia, that the United States would need to return to the large nuclear forces it de-

ployed during the Cold War. Whether that course would be desirable depends on one's view of what deters. Those who believe that the United States must be able to destroy the bulk of Russia's nuclear forces and its leadership in order to deter aggression would probably argue that the United States should match any Russian increase in capability as quickly as possible. Those who subscribe to the theory of minimum deterrence would be less concerned about matching a Russian buildup warhead for warhead.

Effects on Costs

Any adverse effects that the options have on broad measures of deterrence--warheads, survivability, or flexibility--must be weighed against the potential for savings. Measured as a percentage of the total defense budget, the cost savings associated with the options in this study are tiny. Through 1999, for example, none of the five options would ever save more than one-half of one percent of the total level of defense spending recommended by the Clinton Administration.

Measured in terms of opportunity costs, however, those savings are more significant. Savings through 1999 could be as much as $6.6 billion under one of the options and could rise as high as $32.3 billion through 2010. Those savings could, for example, allow the Army to keep several brigades that it now plans to disestablish to meet its budget reduction targets. (Such units might be more useful than nuclear forces in a regional war.) Alternatively, the savings could help finance the deployment of defenses against the SCUD-type missiles that Iraq used to attack U.S. forces during the war in the Persian Gulf. The options in this study might therefore represent a significant part of the effort to reshape the U.S. military so that it is better suited for the types of conflict most likely in the post-Cold War period.

Appendixes

Appendix A

The D5 Flight-Test Program

Like other ballistic-missile programs, the D5 program includes a long series of flight tests to certify that the missile works as designed, to establish its performance capabilities, and to ensure that those capabilities do not deteriorate significantly over time.[1] According to the Navy, each flight test costs about $2 million in addition to the cost of the missile. (This figure could actually be higher because it excludes the cost of operating the test range.) Under the base-case plan, the D5 flight-test program will use 190 test missiles over the next 20 years. This program is significantly smaller than the 341-missile test program that the Navy was planning just one year ago and reflects the greater-than-expected reliability of the system to date.

Components

The Navy's flight-test program has three distinct components, each designed to fulfill specific requirements determined by the Navy with guidance from the Joint Chiefs of Staff (JCS). The first component, operational testing, is conducted over the first few years that the missiles are deployed to establish baseline estimates for reliability, accuracy, and range performance. (The Navy uses the term CINC Evaluation Test, or CET, to refer to operational tests, in which CINC means commander in chief.) The Joint Strategic Target Planning Staff, the military group responsible for forging the nation's nuclear war plans, uses those baseline parameters to assign appropriate targets to the Trident fleet in the event of a nuclear war. The Navy ended the CET program for D5s in late 1992 after using 28 missiles.

To detect any deterioration in the missile's baseline reliability and accuracy, the Navy conducts annual flight tests in the follow-on test program (the second component) after operational testing is complete; it continues those tests until a few years before the last missile is retired. (The Navy refers to the tests as Follow-On CINC Evaluation Tests, or FCETs.) In addition, during the Demonstration and Shakedown Operations (DASO) component, the third portion of the flight-test program, the Navy fires a test missile from each submarine after it is commissioned and every time it completes a major overhaul. Because the Navy has completed its CET program for the D5, the options in this study focus on changes to the FCET and DASO components.

Follow-On Testing

The FCET program consumes the largest number of missiles of the three portions of the flight-test program. The Navy conducts follow-on tests annually for most of the service life of the missile to detect any aging problems

1. For an extensive analysis and description of the D5 testing program, see Congressional Budget Office, "Trident II Missile Test Program," Staff Working Paper (February 1986). The discussion here is based on that earlier study and updated to reflect changes in the program.

that could affect the missile's performance. Like the CET program, JCS guidance for the FCET addresses the deteriorating reliability of the system but does not address the issue of deteriorating accuracy. The services themselves establish the criteria for accuracy. The Navy has stated that it can meet the JCS criteria for reliability with five tests per year. Based on accuracy considerations, however, it considers six tests per year to be the minimum acceptable level.

The Navy supplements these flight-test data by carefully monitoring the missile force with an extensive nondestructive ground testing and surveillance program to detect aging problems that could affect reliability or accuracy. In this phase of testing, the missiles are removed from the submarines and taken apart. Each component is observed closely for any signs of deterioration and tested to make sure that it functions properly. The same process is applied to missiles in the stockpile. Ground testing and surveillance can detect problems without resorting to expensive flight tests; sometimes they can detect them before those problems show up in a flight test. Although this program reduces the need for flight tests, it is not a substitute. Rather, the flight-test and ground test and surveillance programs are complementary. Taken together, they ensure that the submarine-launched ballistic-missile (SLBM) force will operate reliably at an expected level of performance.

According to the Navy, it plans to launch 6 missiles per year during the 20-year D5 FCET program, consuming a total of 120 missiles. Consequently, that rate is the one assumed in the base-case plan. The Navy's original follow-on test program, which was changed in early 1993, would have been significantly larger. Under that plan, the Navy would have launched 16 missiles a year for the first five years and 12 missiles a year thereafter, consuming a total of 260 missiles during the 20-year D5 FCET program.

Still, the Navy's new, lower test rate is higher than the rate of three tests per year planned by the Air Force for its Minuteman III and MX missiles. The Navy justifies its larger program on several counts. First, its submarines launch their missiles over a wide variety of sea conditions and ranges. They operate over large areas of the ocean, which means they can be close to or far from their targets. To function over that broad span of ranges, SLBMs are launched at different angles. Given those variables, the Navy prefers to test its missiles over a wide range of conditions.

A second reason that the Navy gives for its larger flight-test program is its interest in the accuracy of the D5 as well as the reliability. The service has argued in the past that if one were to apply the guidelines for missile reliability to accuracy, the Navy should be launching 14 flight tests per year--a rate roughly equivalent to its original plans for the D5 test program. A third reason for the larger program is the greater speed with which problems can be detected and fixed.

Demonstration and Shakedown Operations

Every time a new submarine is commissioned or an existing submarine completes a major overhaul, the Navy runs it through a Demonstration and Shakedown Operation. During a DASO, the submarine fires a missile from one of its tubes. (After the first four D5 submarines were commissioned, they each launched two missiles.) The Navy conducts these tests for three reasons. First, they demonstrate that the submarine functions properly and is capable of performing its mission. Second, they are used to certify that the crew is operating the submarine properly. Third, they provide an opportunity to isolate suspected problems with the submarine or its missile system and to test solutions to those problems. (DASOs can be used for this purpose because, unlike operational and follow-on tests, they are conducted under carefully controlled conditions in which the ocean currents, weather,

and location of the submarine can be measured with precision.)

Data from DASO tests are not used to establish missile accuracy and reliability because the modifications made to the missiles to allow them to be launched safely in the test range and to provide relevant data perturb the system enough to make them unreliable samples. Because DASOs are unique to missiles launched from ships, they have no parallel in the Air Force missile test programs.

Under the base-case plan, the DASO program for a fleet of 18 D5 submarines will consume 42 missiles. To date, the Navy has used roughly 15 DASO missiles. Options I, II, and III would continue the Navy's policy of launching a missile from each submarine after it completes an overhaul; those options would consume 34, 34, and 38 missiles, respectively. The larger number under Option III reflects the four additional D5-capable submarines in the fleet relative to the other two options.

Options IV and V depart from the Navy's policy and would consume only 25 missiles. The fewer tests under these options would, in turn, reduce the number of tests for submarine and crew certification and perhaps the opportunities to test modifications to the D5 missile.

Size of the D5 Test Program and Inventory

Based on the above discussion of submarine deployments and the flight-test program, it is possible to determine roughly how the 628 D5 missiles that the Navy estimates it would buy under the base-case plan will be used: 190 will be used for the flight-test program (28 for operational testing, 120 for follow-on testing, and 42 for DASOs); 408 will be deployed on 17 submarines (at least one submarine is scheduled to be in overhaul at any one time); and 30 extra missiles will be provided for maintenance and testing--also known as the Fleet Return and Evaluation Program (FREP).[2] In the options that cancel the backfit, the number of FREP missiles would be cut to 15 because D5-capable submarines would only be deployed on the Atlantic coast, thereby eliminating the need for a second maintenance pipeline on the Pacific coast.

The numbers of missiles in each category give a rough indication of how the missiles are apportioned, but they are not exact. The number of missiles deployed on submarines will vary as the number of ships in overhaul (typically three) and the number of submarines in the fleet change. Nevertheless, the 628-missile program assumed for the base-case plan (and the size of the D5 program assumed for each of the options) allows a relatively accurate estimate of the total number of missiles required to support the SLBM force until the submarines are retired.

2. The Fleet Return Evaluation Program provides a reserve so that enough missiles will be available for scheduled deployments even though some missiles are being transported, dismantled, inspected, or reassembled. Missiles are likely to be in one of those conditions as a result of two procedures. First, the Navy regularly removes a deployed missile from a submarine to examine it for signs of deterioration. Those missiles--called service life evaluation (SLE) missiles--are not destroyed. Following ground-based inspections and tests, the components reenter the parts inventory and are incorporated into new or refurbished missiles as required. Second, when a submarine undergoes a major overhaul, all of the missiles on that submarine are dismantled. As with SLE missiles, the components reenter the parts inventory following inspection and, if needed, repair.

Appendix B

Deploying C4 Missiles in D5-Equipped Trident Submarines

An alternative approach to terminating D5 procurement early would be to convert the four D5-equipped Trident submarines that are still under construction to carry C4 missiles. The resulting force would consist of 18 Trident submarines, 12 equipped with C4s and 6 equipped with D5s. The advantage to this approach is that it offers a way to structure the SLBM force around a small D5 missile inventory without raising treaty compliance issues in the way that reducing the number of missiles per submarine would. This option would, however, cost money, according to Navy estimates, and might require more missiles to support the force than are currently in the C4 inventory.

Because the option would not require halving the number of missile tubes, it would achieve this sharp reduction in the D5 program without requiring any changes to the second Strategic Arms Reduction Talks (START II) Treaty. It would also permit the United States to maintain all of the SLBM warheads envisioned in the base-case plan under START II. Compared with that plan, however, this option would deploy about 67 percent fewer of those warheads on D5 missiles.

What Specific Changes Would Be Made?

This option would deploy 6 D5 and 12 C4 Trident submarines (the 8 that are currently configured to carry the C4 and the last 4 Tridents under construction that are being built to carry the D5 but that would be reconfigured to carry the C4 weapon system). This approach would require about 315 D5 missiles, which means that procurement could be halted at the end of 1994. The DASO program would consist of 20 D5 missiles, enough for the Navy to launch a test missile after every submarine overhaul.

Converting the Trident submarines to carry C4s involves a process similar to the backfit but in reverse. A smaller launch tube for the C4 missile must be installed in the missile tubes, and the software for the D5 navigation and fire-control systems must be extensively modified to work with C4 missiles. Changes would also have to be made in cabling and in other supporting systems.

How Does This Approach Affect Costs?

This approach would result in few, if any, savings. According to the Navy's estimates, it could cost about $2 billion more than the base-case plan. As with other approaches that cancel the backfit, the net savings are less because of the cost of refurbishing the C4 missiles and their supporting systems to extend their service lives. But those costs would be even higher under this approach than in the other options because the newest four Trident

submarines would have to be modified to carry the C4 weapon system. According to the Navy, modifying the four D5 submarines to carry the C4 would increase construction costs by about $2 billion. In addition, if the last four Trident submarines are to carry the C4 missile, the Navy would have to equip its Trident support facilities on the Atlantic coast, which have been designed for the D5 missile, to handle the C4. Those changes would cost about $1.5 billion, according to the Navy. Maintaining support elements for a second missile would also increase operations and support costs by about $2 billion through 2010.

Thus, according to the Navy's estimates, the total cost of this approach would be about $5 billion. Because the option would save about $3 billion by not purchasing D5 missiles, it would increase net costs by about $2 billion relative to the base-case plan. Furthermore, the Navy probably would not be able to save money by avoiding remotoring the missiles because this option would require keeping the C4s in the fleet until the last C4-equipped Trident submarine retires in 2027--11 years after the motors would otherwise have been retired under the base-case plan.

Constraints on the Size of the C4 Inventory

A further problem with this approach is that there may not be enough missiles in the current C4 inventory to deploy the missiles on 12 submarines and support the planned flight-test program. This problem would not be significant if the Navy kept the submarines in the fleet for 30 years, because it could make a few adjustments to its overhaul schedule or flight-test program to ensure that the number of missiles it required did not exceed the total inventory. The Navy would not have enough missiles, however, to support 12 C4-equipped submarines if they remained in service for 40 years.

Appendix C

Possible Safety Improvements for Trident Missiles and Warheads

In a December 1990 report to the Congress on the safety of the nuclear arsenal, a commission headed by Stanford physicist Sydney Drell concluded that although the arsenal had a good safety record, the safety of some systems, including the Trident C4 and D5 missiles and the W-76 and W-88 warheads that they carry, could be improved.[1] Some of the possible safety improvements the commission noted would require that the warheads be larger and heavier or have lower yields. Others would require that the missiles have shorter ranges or carry fewer warheads.

Several of the options in this study--specifically, Options II, IV, and V--increase the number of warheads on each missile significantly above the number that the Navy currently plans to deploy under the second Strategic Arms Reduction Talks Treaty. By increasing the weight that the missiles must carry, those options might reduce the ability of the Trident missiles to incorporate some of the safety enhancements suggested by the commission without reducing capability. Whether the United States will decide to improve the safety of the submarine-launched ballistic-missile force is uncertain, however, given the good safety record of the arsenal and the current limits on spending, warhead production, and underground testing. This appendix summarizes the safety improvements to the warheads and missiles outlined by the Drell Commission and also discusses the effect that those improvements might have on the range of the D5 and C4 missiles.

For clarity, the discussion introduces the safety concerns about the warheads and the missiles separately. But the two are inextricably linked--the safety of one affects the safety of the other. As discussed in the Drell Commission's report and this appendix, safety refers to the low probability of an unintended nuclear detonation (which has never occurred) or an accidental dispersal of toxic plutonium (which has not occurred since 1968).

The Warheads

The Drell Commission reported that W-76 and W-88 warheads did not include two key features that would enhance their safety: insensitive high explosives and fire-resistant pits.

The commission reported that there were potential safety problems with the explosives that begin the series of events in the warhead that lead to the nuclear explosion. A modern thermonuclear warhead uses a fission reaction--similar in principle to the atomic bomb dropped on Hiroshima in 1945--to start a fusion reaction. The fission (or primary) explosion is caused when high-energy explosives around a grapefruit-sized hollow shell of plutonium (called the pit) detonate, forcing the plutonium close enough together to start a chain reaction. The energy from that chain reaction is focused on the fusion fuel in such a way that it causes a fusion reaction, liberating vast amounts of energy very quickly. The fu-

1. House Committee on Armed Services, *Nuclear Weapons Safety*, Committee Print 15, 101st Cong., 2nd Sess. (December 1990).

sion reaction in turn causes a large secondary fission reaction that creates a powerful explosion.

The Drell Commission noted that the high-energy explosives (also called high explosives) surrounding the plutonium pit could detonate in some circumstances, such as a violent crash or aircraft fire. More relevant to a discussion of the Trident force, an accidental detonation of the propellant in the third-stage motor of a C4 or D5 missile could also cause the high explosives in the warheads to detonate. (The later section on missiles describes how a missile motor could detonate.) Detonating the explosives surrounding the warhead would not cause a large nuclear explosion--many safety precautions are built into U.S. warheads to avoid such an accident--but it could release extremely toxic plutonium into the environment. In some scenarios, though, it could also produce a very small nuclear detonation (equivalent to a few tons of TNT, or 1,000 times less powerful than the bombs that were dropped on Hiroshima and Nagasaki), which could cause widespread dispersal of plutonium.

The commission reported that the problem in the warhead itself could be solved by replacing the high explosives (HE) with so-called insensitive high explosives (IHE), which are more resistant to accidental detonation. Simply putting IHE in the warheads would not solve the problem, however; changes must also be made to the missiles. Pound for pound, IHE has only two-thirds the energy of HE, which means that more IHE (both volume and mass) is required to achieve the same result. Because warheads are designed to maximize the yield from the very small space and weight allotted them, there is no room for the extra IHE. Consequently, incorporating IHE into the warheads would result in a lower nuclear yield. Alternatively, the warheads could achieve their original yield by increasing the amount of IHE, and thus their size and weight. But such a course would reduce either the range of the missile or the number of warheads that the missile could carry.

The commission's report also discussed the lack of fire-resistant pits in the W-76 and W-88 warheads. Plutonium, like all metals, can melt if the temperature gets high enough, and its melting temperature is lower than the temperatures the warhead would experience in an aircraft fuel or rocket-motor fire. Again, there would be no risk of a nuclear explosion during such an accident, but the molten plutonium could be released. Encasing the pit in a sphere of heat-resistant metal could prevent it from releasing plutonium during fires with temperatures near 1,000° Celsius for several hours.

A fire-resistant pit, however, may not prevent the release of plutonium at the higher temperatures associated with burning missile propellant. Neither would it contain plutonium in the event of an HE detonation. Consequently, a fire-resistant pit may make sense for SLBM warheads only if the HE in the warhead were replaced by IHE and perhaps only if the propellants in the C4 and D5 missiles were also converted to nondetonable propellants (see the discussion below).

The Navy is currently conducting a joint study with the Department of Energy (which designs and manufactures all nuclear warheads) to identify alternative warheads for the C4 and D5 missiles that would enhance safety, among other things.

The Missile

The Drell Commission also noted that the design of the C4 and D5 missiles posed a potentially serious problem that relates directly to warhead safety. Because the volume of a missile tube on a submarine is constrained, designers try to build in every ounce of performance they can. One of the innovations in the C4 and D5 systems is that the designers created more space for propellant (missile fuel) by placing the warheads around the missile's third stage (see Figure C-1). They also used a very energetic type of propellant--called a 1.1

class propellant--in all three stages of the missile, as they had in previous SLBM designs.

This design creates a unique set of problems. The energetic propellant is detonable, which means that it can detonate accidently (rather than burn) if it is subjected to the right conditions. The problem is aggravated in the C4 and D5 because the third stage is next to the warheads--which means that the shock from a detonation could damage the warhead. If the missiles carry warheads that contain HE, accidentally detonating the propellant could detonate the HE and release plutonium.

Even if the warheads contain IHE, their close proximity to the third stage means that the strong shock waves from a third-stage detonation might still severely damage the pit and release plutonium. In some cases, it could even cause the IHE to detonate. In other missiles whose warheads are loaded on top of the third-stage motor rather than around it, the problem of IHE detonation is considerably

Figure C-1.
Schematic Drawing of the Position of Warheads Around the Third Stage of the D5 Missile

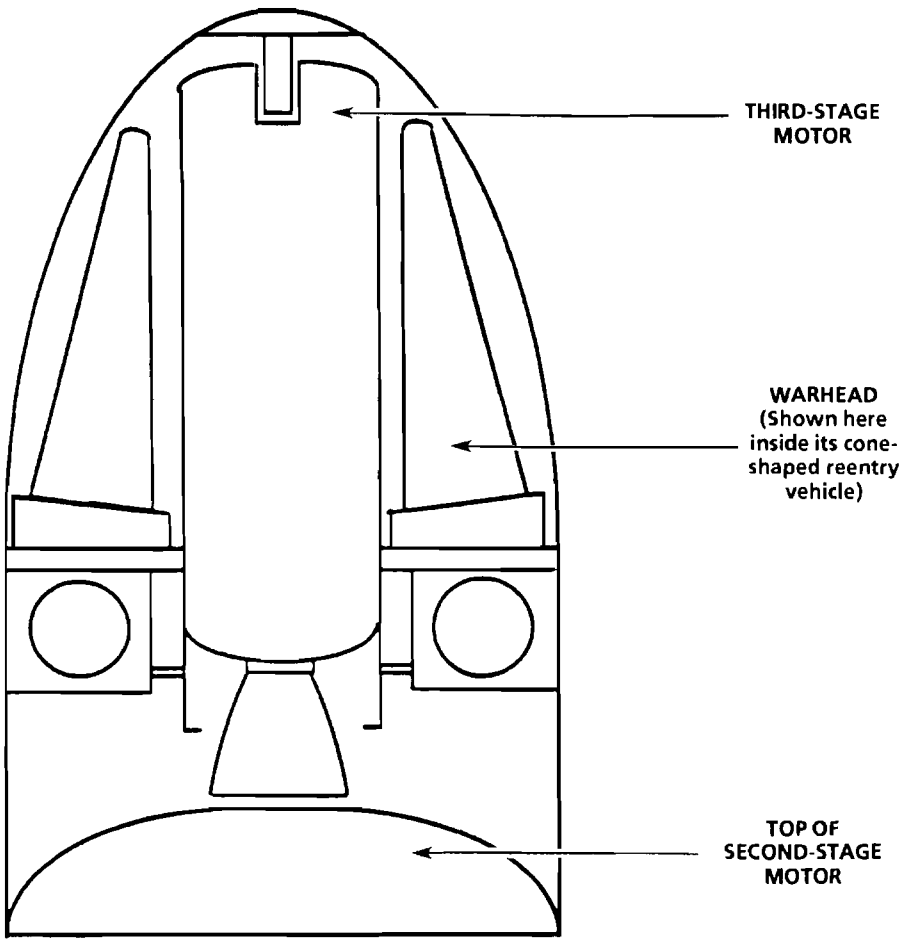

SOURCE: Congressional Budget Office (CBO) based on a briefing by John R. Harvey and Stefan Michalowski, Center for International Security and Arms Control, Stanford University, August 1992.

NOTE: Although the figure depicts only two warheads, under the CBO options the D5 missile would carry four to eight warheads arranged in a circle around the third-stage motor.

lessened because shock waves dissipate before they reach the warheads.[2]

The commission suggested several possible solutions. As an immediate measure, it recommended that the Navy remove the warheads from the missiles before loading and unloading them from the submarines, thereby eliminating the most likely cause of an accident. The Navy has already instituted this change for the D5 but not for the C4. A long-term solution would substitute 1.3 class propellants for the third stage and possibly for the other stages as well. Those propellants are less energetic but also less sensitive to external stimuli. According to the commission, using a third stage with 1.3 class propellant would reduce the maximum range of the D5 by 100 to 150 nautical miles--less than 4 percent of the total range of the missile. The Navy estimates that this change would cost from $1.5 billion to $2 billion and take 10 years to complete. Replacing the propellants in all three stages would cost from $9 billion to $12 billion and, according to the Navy, reduce the range of the missile by 500 to 750 nautical miles.

Another, more radical option, examined by John Harvey and Stefan Michalowski at the Center for International Security and Arms Control at Stanford University, is to remove the third stage of the missile altogether.[3] This proposal would reduce the range of a D5 carrying eight W-88 warheads by 20 percent. Harvey and Michalowski suggest, however, that this approach is best carried out under START II, because the missiles would carry fewer than eight warheads and the resulting missile range would be longer. The Navy estimates that the research and development required to redesign the missile would cost $500 million. (That extensive an effort would be necessary because the absence of the third stage would affect the structure, control systems, and flight properties of the missile.) Modifying the missiles would cost roughly $1.5 million each, or about $1 billion for a 700-missile force.

Redesigning the missile would also have some implications for the START II treaty because the modified missile would probably be considered a new type. The treaty requires that new types of missiles be declared and that the other side be given the opportunity to examine them. Other than the need to follow the procedure prescribed by the treaty, however, removing the third stage would probably not cause any problems in complying with the treaty.

The Complete System: The Missile and Warhead Combined

Assessing the safety of the missile and the warhead individually may be less important than assessing the safety of the missile and warhead together as a system. Viewed in that context, it may make no sense to make the warhead safer without addressing the missile's potential for accidental detonations. Therefore, corrections to both the warhead and the missile may be required to address safety concerns properly.

Implications for the Trident Force

Pursuing Option II and the other options that deploy more than four warheads per missile may not have a direct effect on the safety of the SLBM arsenal. The United States has not yet decided how or whether to implement the Drell Commission's recommendations, which would require expensive changes to systems that, according to the commission, are already

2. See John R. Harvey and Stefan Michalowski, *Nuclear Weapons Safety and Trident: Issues and Options* (Stanford, Calif.: Stanford University Center for International Security and Arms Control, forthcoming), which provides an extensive discussion of Trident safety issues.

3. Ibid.

relatively safe. The whole issue is currently the subject of an intense debate. For its part, the Navy believes its Trident weapon systems meet all existing safety criteria and that further improvements in safety are not necessary. Nonetheless, it continues to study the question. The United States is also operating under Congressionally mandated constraints on testing nuclear weapons underground, which will culminate in a unilateral moratorium in 1997 under the terms of the Hatfield amendment to the 1993 Energy and Clean Water Appropriations Act. Given all of those factors, it is possible that the Clinton Administration may decide not to take additional measures to improve the safety of the Trident fleet.

Appendix D

Increasing Savings by Halving Operating Tempo

Another way to save money on the submarine-launched ballistic-missile force while retaining the ability to rebuild forces relatively quickly if necessary would be to reduce the force's operating tempo--the portion of the submarine fleet that the Navy keeps at sea during peacetime. Reducing the operating tempo would reduce the number of warheads available for use during peacetime. Such an action would be similar to the unilateral decision made by President George Bush in September 1991 to reduce the number of nuclear bombers that the United States kept in a high state of readiness.

Although reducing the operating tempo would achieve near-term savings and allow forces to be rebuilt quickly, it would make no changes in the size of the force. As a result, this approach would keep long-term procurement costs high because the United States must still replace all of the Trident submarines and missiles envisioned in the base-case plan.

What Specific Changes Would Be Made?

At any given time, the United States keeps roughly two-thirds of its ballistic-missile submarines at sea--for an operating tempo of 67 percent. The remaining one-third of the force is either undergoing overhaul or maintenance or preparing for another 70-day deployment at sea. The United States has maintained this high operating tempo for many years. The Navy considers it an efficient way to ensure that the United States has enough ballistic-missile submarines at sea to retaliate with substantial force following a nuclear attack.

To maintain two-thirds of the force at sea and still keep submarine duty bearable for sailors, the Navy assigns two crews to each ship. The crews alternate deployments; when a submarine comes back from patrol, a new crew takes over, readies the submarine, and takes it out for the next patrol. The crew members who remain ashore rest and train.

To reduce costs, this option would end the use of double crews and would halve the operating tempo of the Trident fleet. Only about one-third of the submarines would be at sea at any one time, which would leave roughly unchanged the time that sailors spend at sea. In all other respects, the SLBM force would be identical to the one proposed under the base-case plan.

What Are the Effects on Capability?

This approach would reduce the number of Trident submarines at sea during peacetime from 12 ships to 6 ships under the base-case plan and Options I and IV, which also keep 18 submarines in the fleet. (The numbers of sub-

marines at sea discussed in this appendix would apply to 1998 and beyond when all 18 Tridents have entered the fleet.) Consequently, this approach would cut roughly in half the number of SLBM warheads available for retaliation in the event of a surprise nuclear attack.

Furthermore, this option may increase the vulnerability of the submarine fleet during normal operations by reducing the number of submarines that an opponent would have to detect and destroy to neutralize the U.S. SLBM force. With only six submarines at sea, the ability of the United States to respond to a surprise attack would be somewhat reduced if the submarines of a remilitarized Russia or some other enemy nation could detect and track a few of the Trident submarines long enough to attack and destroy them. Under the options that retire C4 submarines early and so reduce the fleet to ten submarines (Options II and V), the reduction would be even more dramatic--from seven submarines at sea to three or four if the fleet's operating tempo is reduced.

Still, the end of the Cold War may have made a smaller retaliatory capability acceptable--for three major reasons. First, the significantly reduced tension between the United States and Russia and the end of the confrontation between the North Atlantic Treaty Organization nations and those of the Warsaw Pact have profoundly reduced the likelihood of nuclear war in general and a surprise attack in particular. The United States, therefore, may not need to keep as many submarines at sea during peacetime to deter nuclear war (see the discussion in Chapter 5). Second, under the second Strategic Arms Reduction Talks Treaty recently signed by Presidents George Bush and Boris Yeltsin, Russia would have smaller nuclear forces; as a result, the U.S. SLBM force would have fewer targets to cover. Third, the threat to U.S. ballistic-missile submarines--never considered large even at the height of the Cold War--has diminished because Russia now keeps many of its attack submarines in port. The likelihood that those forces could be reconstituted quickly in the future, although it cannot be dismissed, is small because Russia has also sharply reduced its construction of attack submarines. In addition, no other potential adversary has the ability to threaten U.S. submarines. Consequently, there may be less need to keep a large number of submarines at sea just to ensure that enough survive to launch their missiles.

Moreover, relative to the options that reduce the SLBM force to 10 submarines, this approach retains the ability to rebuild forces fairly quickly if necessary because it would not cut down the number of submarines in the fleet. During a crisis, the United States could rapidly return to the levels planned during the Cold War, deploying 12 or more submarines out of a total fleet of 18 ships (it could deploy 6 or more with a 10-ship fleet) in a matter of a few days or weeks by curtailing crew leave and training. (However, keeping up this tempo for long periods could raise concerns about safety if personnel became overextended.) If tensions were to increase over the next several years, the United States could again increase the number of submarines at sea by training second crews and putting two-thirds of its force to sea on a permanent basis. It could require several years to rebuild the needed crews; nevertheless, the time required to reestablish a higher operating tempo permanently, and therefore permanently increase the number of missiles deployed at sea, would surely be substantially less than the time required to accomplish the same increase in a 10-submarine force by building new submarines and new missiles.

How Does a Reduced Operating Tempo Affect Costs?

Reducing the operating tempo of the SLBM force would result in near-term savings without making any other changes to the base-case

plan. (See Table D-1 for savings for the base-case plan and all options. These savings are in addition to those achieved by the options, as shown in Table 10 on page 30.) By 1998, when all 18 Trident submarines have entered the fleet, moving to single crews would save roughly $0.3 billion per year, relative to the base-case plan, and $4.5 billion through 2010. The savings would be less over the next several years, however, because the last 5 Trident submarines are still under construction and the final one is not scheduled for delivery until 1997. (Savings in 1994 would be $100 million; total savings over the next six years would be $1.2 billion.) The additional savings from reducing the operating tempo of the fleet would be the same for Options I and IV (which also maintain a force of 18 submarines).

If the force were reduced to 10 submarines (Options II and V), halving the operating tempo would reduce costs by $3.6 billion through 2010 (and almost $150 million a year after 2008, when the 8 C4-equipped submarines have been retired). Through 1999, however, the savings would be the same as those under

Table D-1.
Potential Additional Savings from Reducing Operating Tempo
(In billions of 1994 dollars of budget authority)

	1994	1995	1996	1997	1998	1999	Total, 1994-1999[a]	Total, 1994-2010[b] Replace Submarines After 40 Years	Total, 1994-2010[b] Replace Submarines After 30 Years
Options That Maintain a Force of 18 Submarines (The Base-Case Plan and Options I and IV[c])	0.1	0.1	0.2	0.2	0.3	0.3	1.2	4.5	4.5
Options That Maintain a Force of 14 Submarines (Option III)[d]	0.1	0.1	0.2	0.2	0.3	0.3	1.2	3.9	3.9
Options That Maintain a Force of 10 Submarines (Options II and V)[e]	0.1	0.1	0.2	0.2	0.3	0.3	1.2	3.6	3.6

SOURCE: Congressional Budget Office based on Department of Defense data.

NOTES: The operating tempo is the number of Trident submarines that the Navy deploys at sea at any one time. Savings in this table reflect reducing the operating tempo from two-thirds of the force at sea to one-third, starting in 1994, by ending the practice of assigning two crews to each submarine.

The savings beyond 1999 are not detailed estimates but are assumed to be proportional to the number of submarines in the fleet.

a. The savings from all options are the same through 1999 because changes to the size of the fleet would not occur until 2001.

b. The savings from reducing the operating tempo are not affected by assumptions about the service life of Trident submarines.

c. Because the Clinton Administration has not released its long-term plan for the submarine-launched ballistic missile force, the Congressional Budget Office has defined a base-case plan to provide a benchmark for assessing the effects of the options it examines.

d. These estimates assume that the four oldest C4-equipped Tridents would be retired at the rate of one per year starting at the time of their refueling overhauls in 2001. Beyond 2004, the size of the force would remain constant at 14 submarines.

e. These estimates assume that the eight C4-equipped Tridents would be retired at the rate of one per year starting at the time of their refueling overhauls in 2001. Beyond 2008, the size of the force would remain constant at 10 submarines.

the base-case plan because the size of the fleet would be unaffected until 2001. Using single crews would reduce the cost of a 14-submarine fleet by $3.9 billion through 2010.

The estimates above reflect the savings in direct costs for military personnel from reducing the number of crews plus the savings in indirect costs associated with reductions in training and other activities. The savings also reflect lower operating and maintenance costs from less time at sea.

Although reducing the SLBM force's operating tempo would produce immediate near-term savings, the insurance that this approach provides against a resurgent nuclear or antisubmarine threat would be expensive in the long run--the Navy would still have to purchase replacements for 18 submarines and the missiles required to support them. Thus, this approach would not reduce procurement costs relative to the base-case plan. In contrast, Option II, which would keep about the same number of submarines and twice the warheads at sea using a 67 percent operating tempo, would save about $1 billion per year over the long term (relative to the base-case plan) by reducing the size of the fleet.

One possible solution to the problem of long-term procurement costs is to adopt a two-phase approach to reducing the expense of the SLBM force: like Option II, begin to move toward a 10-submarine force by 2010, but reduce operating tempo in the near term. That approach would achieve near-term savings while still retaining a hedge against an increase in the nuclear threat for the next 10 years or so. Then, assuming that the threat of a resurgent Russia had diminished significantly, the United States could reduce long-term procurement costs by reducing the Trident fleet to 10 submarines. The operating tempo of that smaller fleet could be returned to 67 percent by returning to double crews. Maintaining that at-sea rate for a 10-submarine force would require 20 crews--only 2 more than the level necessary for an 18-submarine force at the lower operating tempo.

Appendix E

Treaty Issues Raised by Detubing SSBNs

Both of the options presented in Chapter 4 reduce the number of missiles on each Trident ballistic-missile submarine (SSBN). Although conceptually this method for reducing the required number of D5 missiles has appeal (it would save several billion dollars through 2010 and affect capability only modestly), it raises important issues of treaty compliance. In short, neither of the Strategic Arms Reduction Talks treaties permits the number of missiles credited to a submarine to be reduced by deactivating its missile tubes.

The options that deactivate tubes (Options IV and V) assume that treaty compliance concerns can be addressed by changes in the START I or START II treaties, either through formal amendments or changes in the procedures for eliminating launchers. (Under the treaties, the missile tube is considered the launcher.) They also assume that verification concerns can be met by a combination of physical modifications to the submarine--filling the tubes partially with a permanent substance such as concrete--and modest changes in the conversion rules and inspection protocols in the treaties. The assumption that those modifications will be acceptable would affect the savings from these options; if more extensive modifications are necessary, the options would cost more and therefore save less than reported in Chapter 4. Moreover, if the United States and Russia do not agree to modify START, the United States cannot pursue Options IV or V without electing to reduce its force well below the 1,750-warhead limit on submarine-launched ballistic missiles.

A range of possible methods are available to modify the submarines, each entailing a different set of costs. But detubing also requires consideration of the relevant verification and conversion protocols in the START I and II treaties and how they might be modified--either through the joint commission established to implement the treaty or a formal amendment. Complicating the entire issue are certain political obstacles that must be overcome before detubing is a viable option for the Navy's SLBM force.

Status of Detubing as a Means of Meeting Treaty Limits

Neither the existing START I treaty nor the pending START II treaty (signed but not yet ratified) recognizes deactivating missile tubes--sometimes called detubing--as a means of reducing the number of missiles and warheads attributed to a submarine.[1] Those treaties allow ballistic-missile submarines to be converted to a type of submarine not covered by the treaty--such as a cruise-missile or

1. "Detubing" is used to refer to deactivating some, but not all, of the missile tubes on a ballistic-missile submarine. Detubing does not necessarily imply that the tubes must be physically removed from the submarine. Rather, it implies that they must be deactivated in a manner that both sides find acceptable so that the submarine can be counted as carrying fewer missiles than it is currently credited with under the START II treaty.

special-forces submarine--by removing the entire missile section from the ship. But they do not address partial detubing--that is, eliminating or deactivating only some of the missile tubes.

Given the current status of detubing in the treaties, the United States could pursue two avenues. It could unilaterally detube its submarines--nothing in the treaty prevents that. But because the treaty does not recognize detubing as a way of eliminating SLBM launchers, a detubed submarine would be counted as carrying its full complement of 24 missiles--not the 12 that it actually would carry. Consequently, the United States would get no credit for reducing the number of missiles on each submarine and would therefore be obliged to deploy fewer warheads than allowed under START II.

The United States could also negotiate changes in START to allow the number of SLBM launchers to be reduced through detubing as well as by retiring submarines or converting them to non-SSBN roles, the approaches already specified in the treaty. This appendix deals with the issues raised by negotiating an agreement that would allow detubing under the START treaties.

The START I treaty is the point of reference for the following discussion because it spells out detailed provisions for converting or eliminating launchers and for on-site inspections to ensure compliance. In contrast, START II is in essence a series of amendments to START I and does not have its own comprehensive set of conversion and inspection protocols. Instead, it relies on the protocols in the first START treaty except in instances in which it makes specific changes.

Issues That Must Be Addressed

If detubing is to be allowed, the United States and Russia must accomplish the following:

- Recognize detubing as a legitimate means of eliminating launchers.
- Agree on a method for permanently deactivating SLBM tubes.
- Set limits on the number of tubes per submarine and submarines per side that can be detubed. (For example, how many total tubes and how many tubes per submarine can be deactivated? Would it be acceptable to deploy different numbers of missiles in submarines that are deployed in different oceans? Are both detubing and downloading--reducing the number of warheads on a missile--allowed on the same submarine? Is detubing optional or required for both sides?)
- Ensure that both the elimination of the launcher and continued compliance can be adequately verified.
- Agree on a procedure by which the above changes can be incorporated into either the first or second START treaty.

The remainder of this appendix explains each of these issues in more detail, assuming that the United States and Russia have agreed in principle to allow detubing. But such an agreement may be the obstacle that is the most difficult to overcome--more difficult than working out the details of implementing the general agreement. For example, Russia may be reluctant to make changes just to save the United States money. Furthermore, the United States may be hesitant about opening negotiations for fear they could reopen issues that the United States thought were already resolved.

What Would Be the Nature of an Agreement?

Once Russia and the United States had agreed to allow detubing, they could use one of two mechanisms, both of which have precedents,

to incorporate the changes into the START treaties. The first carries out the changes through the body established to work out implementation and compliance issues; the second formally amends one of the START treaties.

If detubing can be viewed as an issue of eliminating launchers, formal changes to the START treaty itself may not be required. Instead, the procedures for launcher elimination established in the Conversion or Elimination Protocol could be altered by the joint commission established to implement START, the Joint Compliance and Inspection Commission (JCIC). Indeed, the text of the protocol obligates the parties to use the JCIC for changes that "may be necessary to improve the viability or effectiveness of the Treaty" rather than resort to formal amendments, but only as long as those changes "do not affect the substantive rights or obligations" of the parties.

Making changes through the JCIC would be the simplest way to incorporate detubing because it would not require that the Senate and the Russian parliament ratify the changes. If fundamental changes to the inspection provisions are not necessary to achieve adequate verification, the JCIC approach may be the best. The United States and the Soviet Union made extensive use of a similar commission, the Special Verification Commission established under the Intermediate Nuclear Forces Treaty, to resolve important issues that arose in implementing that complex agreement.

If, however, detubing is considered a fundamental change or if inspection provisions require major modifications, a formal amendment to one of the START treaties may be necessary. Such an amendment could be made before or after the Senate and Russian parliament ratify the START II treaty. The disadvantage of a formal amendment is that it requires ratification--a time-consuming and politically more uncertain course than resolving the issue in the JCIC. One possible advantage of a formal amendment in this case is that it would make a more visible change, which might be preferable if it enhanced the prospects for ratification of the START II treaty by Russia's parliament.

Defining Detubing and Changing Rules for Launcher Elimination

The United States and Russia must first recognize detubing as an acceptable way to reduce the number of launchers (missile tubes) attributed to an SSBN. They must also place limits on the number of missile tubes per submarine that can be deactivated and on the total number of submarines that can be detubed.

Establishing a Method for Deactivating Tubes

Once they have defined detubing, the United States and Russia must also agree on one or more acceptable procedures for deactivating the tubes. Those methods could range from slicing out the entire hull section containing the missile tubes to filling the tubes with a substance like concrete. The costs for these procedures vary widely.

How acceptable such methods would be depends on how the United States and Russia view the balance between cost and verifiability. It also depends on how each views the verifiability of the SLBM downloading that detubing would replace. Earlier treaties (START I and SALT II) provide procedures for removing tubes that, in principle, have already been accepted by the superpowers as verifiable. START II provides a technique for converting the silos of Russia's SS-18 intercontinental ballistic missiles for use by smaller missiles that may also be applicable to detubing. Regardless of the method chosen, detubing could prove to be easier to verify and more difficult to circumvent than the downloaded SLBMs currently allowed by START II.

The Parties Could Use START Conversion Methods. Although the START treaty does not allow the parties to modify submarines to carry fewer missiles (detubing), it out-

lines methods to remove all of the missile tubes from an SSBN so that it no longer has a nuclear role. Those deactivation methods could also be used to remove some of the tubes and allow the submarine to be counted as carrying fewer missiles. If the methods provide enough confidence that one side has removed the tubes in an entire submarine, they should provide similar confidence that a few tubes have been removed. The major disadvantage of these START conversion procedures is their high cost.

The START I treaty, like its predecessor SALT II, requires extensive modifications to convert an SSBN to a non-SSBN role. It further requires that those changes be visible by imaging satellites--also called national technical means. START includes two methods of SSBN conversion: one removes the entire hull section containing the missile tubes; the other, less extensive method does not require cutting the keel but removes the tubes and all portions of the pressure hull and decks through which the tubes pass. The Navy estimates that the costs to convert one submarine to carry 12 missiles would be $300 million and $150 million for the first and second methods, respectively. The fixed costs for research and development for those methods would be $360 million and $125 million, respectively.

The modifications in either case must change the appearance of the submarine in such a way that satellites can observe the absence of the missile tubes. Under the earlier SALT II treaty, whose conversion rules are similar to those in the START treaty, both the Soviet Union and the United States converted SSBNs to submarines that do not carry ballistic missiles by cutting out the missile sections of the hulls.

Less Expensive Detubing Methods Are Possible. The marked improvement in U.S.-Russian relations since START I was negotiated may now provide the opportunity to detube SSBNs in less expensive ways. Such changes would be consistent with the spirit of the START II treaty, which relaxed the START I rules for bomber conversion and SLBM and ICBM downloading and removed the treaty's prohibitions against SS-18 silo conversions.

Moreover, the on-site verification provisions in the START protocols provide a solid foundation on which to build an inexpensive procedure for reducing the number of missiles on an SSBN. Indeed, aside from establishing the legality of detubing itself, the parties may be able to incorporate detubing by making few, if any, changes to the conversion and inspection protocols.

The three methods described below illustrate a range of ways to reduce missile tubes. They can be used individually or in combination and would be significantly less expensive than the conversion methods already included in the START treaties. The options in this study assume that the first method is used: filling tubes with concrete.

Fill the Tubes with Concrete. The first method would fill the tubes with a permanent substance such as concrete. ("Permanent" does not imply that the concrete could not be removed, simply that it would be difficult to do so.) The tubes would not necessarily be filled completely--the exact amount, density, and placement of the concrete within the tube would depend on such factors as the submarine's ballast and center of mass. To make the concrete harder to remove, one could remove (or simply drill holes in) the launch tube within the missile tube before filling it.

The great advantage of filling tubes with concrete is that it would be relatively inexpensive and take relatively little time to do. The Navy estimates that it would cost about $50 million per submarine, including the required research and development, to fill the tubes, which compares favorably with the more than $300 million required to convert a submarine under the existing START methods. In addition, the concrete would be difficult to remove and easy to verify with on-site inspection.

The disadvantage of this method is that it may not be possible to verify compliance with

less intrusive and more readily available methods such as imaging satellites. Moreover, tubes that have been deactivated in this way cannot be verified by visually inspecting the outside of the submarine from a distance; inspectors must look down the tubes. The Navy also reports that the chemical reaction between the concrete and the metal launch tubes could cause corrosion. Steps to address that problem might include lining the tube before filling it or using another material that is less chemically reactive.

Weld the Tubes Shut. A second method would weld the tubes shut by fusing the hatch to the tube. (However, the Navy might still want to fill the tube with concrete to compensate for ballast changes from the missing missiles.) The disadvantage to welding the tubes shut is that it would be difficult to verify that there was no missile in the tube. One solution would be to use a seal on the weld that would make it possible, through on-site inspections, to verify that the tube had not been opened.

Like the previous approach, welding the tubes shut does not permit compliance to be verified through satellite surveillance. Capping tubes in this fashion would cost roughly $50 million per submarine, including the required research and development.

Shear Off the Tops of the Tubes and Change the Superstructure. If either the United States or Russia believed that monitoring by satellite was required to verify compliance adequately, the two parties could use a third method: removing the fairing over the aft tubes, shearing the tubes off just above the pressure hull, and welding a cap over the shortened tubes (see Figure 3 on page 15). If the modified fairing made the submarine noisier underwater, the Navy could also cover the sheared and capped tubes with some sort of blister or modified superstructure that would preserve the ship's hydrodynamic quieting but that would be both low enough that the missiles could not fit in the shortened tubes and distinct enough that a satellite could observe the modified fairing. In addition, the Navy might fill the tubes with concrete or some other ballast material to compensate for the missing missiles. Modifications to the fairing would probably be the most difficult of the three methods to undo quickly; but perhaps they would not be that much more difficult than chipping concrete out of the missile tubes and replacing the launch tubes.

This third method would be more costly than the other two, but it would still be less expensive than either of the more extensive START methods. It would cost about $100 million per submarine, including the required research and development. This method would be the easiest to verify by on-site inspection and the only one of the three options that could be verified by national technical means.

The Options in the Analysis Assume That the Tubes Are Filled with Concrete. The options that deactivate missile tubes (see Options IV and V in Chapter 4) assume that the United States and Russia agree to use the first method--filling the tubes with concrete. That low-cost modification seems consistent with the essence of START II, as exemplified by the parties' allowing SS-18 silos to be reused for smaller missiles after being partially filled with concrete and by allowing bombers to be removed from counts of nuclear warheads simply by basing them away from their warheads (rather than requiring physical changes). Accordingly, the savings from Options IV and V have been reduced by $50 million per submarine, for a total cost of almost $1 billion for an 18-submarine fleet, including research and development costs.

Can Compliance Be Adequately Verified?

Detubing raises two central verification issues. First, can the parties verify that the tubes have been properly eliminated (in this case, filled with concrete)? Second, can the parties verify that the tubes have not been re-

activated (that is, the concrete removed and the missiles reloaded)? Because detubing would replace downloading in the options, it may be reasonable to judge the adequacy of verification against that already provided by downloading, which is allowed by the START treaties.

Because downloading makes no changes to the submarine that can be monitored by satellite, the primary mechanism for ensuring that it has occurred is on-site inspection. The START Inspection Protocol includes extensive on-site inspection provisions designed to allow each side to verify the number of warheads on each SLBM that have been downloaded. With few, if any, changes, those inspection provisions could be used to verify compliance with any of the detubing modifications outlined above.

On-Site Inspections

The so-called reentry vehicle (RV) inspections are the most relevant START method for verifying that filled tubes have not been reactivated. These inspections allow each side to count the number of RVs deployed on a missile. (A reentry vehicle is the cone-shaped body that surrounds the warhead to protect it from the high temperatures that occur during reentry into the atmosphere.) Also applicable may be a version of the provision in the START II Conversion or Elimination Protocol that allows on-site observation while SS-18 silos are being filled with concrete.

Each side is allowed 10 RV inspections per year to be divided between ICBMs and SLBMs. No more than two inspections a year can be conducted at any single facility, and only one submarine and one missile on that submarine can be inspected during an inspection. For an RV inspection of an SLBM, the inspection team is allowed to select any submarine on a base and any missile tube in that submarine. The side being inspected must then open the hatch on the selected tube, remove the nose cone of the missile, and allow the inspectors to count the warheads on the missile. If the tube is declared empty by the country being inspected--which would be the case with a deactivated missile tube--the country conducting the inspection may inspect the tube to verify that it is, indeed, empty.

The START protocols also include procedures to decommission or convert SSBNs, but those procedures do not allow on-site inspections to ensure compliance during the conversion process for ballistic-missile submarines. Verifying that detubing has been carried out properly when less far-reaching methods such as filling tubes have been used may require that inspectors observe the tubes being filled. Such a procedure would be much like the provision in the Conversion or Elimination Protocol of the START II treaty regarding SS-18 silo conversion.

These changes could be made in the JCIC, especially given that the SS-18 procedure in START II establishes a precedent and the outlines of an acceptable procedure. If necessary, a more formal amendment could be made to the treaty.

Are These Provisions Enough?

Are these existing inspection provisions adequate to verify that a submarine has been properly detubed and that its missiles have not been reloaded? Because the detubing options in this study would eliminate downloading--and any associated risks of "breaking out" of the treaty--by keeping eight warheads on each SLBM, the best measure of adequate verification may be to compare detubing with downloading, which is already permitted by START I and II.

In that context, the existing START on-site inspection protocols may allow Russia to verify U.S. compliance with detubing--even if the tubes are filled with concrete--with the same (or greater) confidence that it is able to verify that C4 and D5 SLBMs remain downloaded. On-site RV inspections should also be able to detect violations just as easily for detubing or downloading. (For example, inspectors would

ask to look into a tube declared to be empty to ensure that it was, indeed, still filled with concrete.)

Moreover, because a side could redeploy surplus warheads from downloaded missiles more easily than chip out concrete from a filled tube, it is arguably more difficult to break out of the treaty surreptitiously with a detubed submarine than with a submarine carrying downloaded missiles. That assertion is particularly germane because START II does not require that the front end of the missile be modified to carry fewer warheads. Neither does it require that the excess warheads be destroyed or even moved to a separate location. Furthermore, the United States, by accepting the START II provision that allows Russia to convert its SS-18 silos without insisting on a larger RV inspection quota, at least has demonstrated that it believes such a method is verifiable without adding additional RV inspections to the quotas already established by START I.

Still, changes to the inspection protocols might be desirable to monitor continued compliance with detubing rules or to establish conversion inspections more formally. For example, the parties could change the substance of the inspection provisions by adding inspections of one or more deactivated tubes to the standard SLBM RV inspections. The parties could also increase the number of annual RV inspections allowed by the treaty. Those types of changes could be achieved either in the JCIC or through formal amendments to the treaty.

Could Changes to START Actually Be Achieved?

Would Russia enter into an agreement that considers deactivating SLBM tubes as a legitimate means of meeting the START II treaty limits? It seems likely that working out the technical details of detubing would be relatively straightforward, provided that the United States and Russia agreed to do so. But reaching such a consensus may be blocked by political obstacles within both the United States and Russia. The United States would first have to decide to pursue the agreement; the Russians would then have to be persuaded that the agreement was in their best interests. Negotiations may be more likely to succeed if they cover a broader set of issues than detubing, perhaps including other nuclear weapons issues or even foreign assistance.

If the United States decided to pursue an agreement, could it convince the Yeltsin government to modify START? It is quite possible that Russia would be unwilling to make modifications simply to allow the United States to save money. But for several reasons, the Yeltsin government may be willing to consider it. First, Russia's recent proposals during the final phases of the START II negotiations provide a precedent for modifying an arms control agreement to save money. Based primarily on cost considerations, Russia asked that it be freed from the provisions of the Bush/Yeltsin agreement requiring it to dismantle the six-warhead SS-19 ICBM and destroy the silos that now house the large SS-18 missiles. The Russians preferred to save money by downloading the SS-19 missiles to carry one warhead rather than deploy new single-warhead missiles to take their place. They also preferred to use the empty SS-18 silos for new single-warhead SS-25 missiles rather than destroy the silos as required under the START I dismantlement procedures. The arguments used by Russia to push the SS-19 downloading and the SS-18 conversion provisions, which the United States accepted, show that costs can be a compelling argument for modifying an agreement.

Second, it could be difficult for Moscow to argue that filling tubes with concrete is not a verifiable method, given that the United States accepted the Russian proposal to convert its SS-18 silos for use by smaller missiles by partially filling them with concrete. Third, Yeltsin might be willing to consider detubing if curtailing the D5 arsenal could help him get

START II ratified by a skeptical Russian parliament. Detubing might mollify some hardline critics of the treaty who argue that it is too favorable to the United States because it forces Russia to eliminate the core of its nuclear arsenal (its large multiple-warhead ICBMs) without limiting the strength of the U.S. arsenal (its SLBMs and bombers). Indeed, some Russian deputies have complained about the ease with which the United States could upload its SLBMs. Yeltsin could make the argument that detubing would place additional restrictions on the U.S. SSBN fleet: it would reduce the risk of breaking out of the treaty relative to downloading, and it would probably reduce the number of D5 missiles that the U.S. Congress would be willing to buy. However, if the United States takes measures to terminate the D5 program before it secures a detubing agreement, it may harm its negotiating position.

CONGRESSIONAL BUDGET OFFICE
Second and D Streets, S.W.
Washington, D.C. 20515

OFFICIAL BUSINESS
PENALTY FOR PRIVATE USE, $300

FIRST-CLASS MAIL
POSTAGE & FEES PAID
C.B.O.
WASHINGTON, D.C.
PERMIT No. G-70